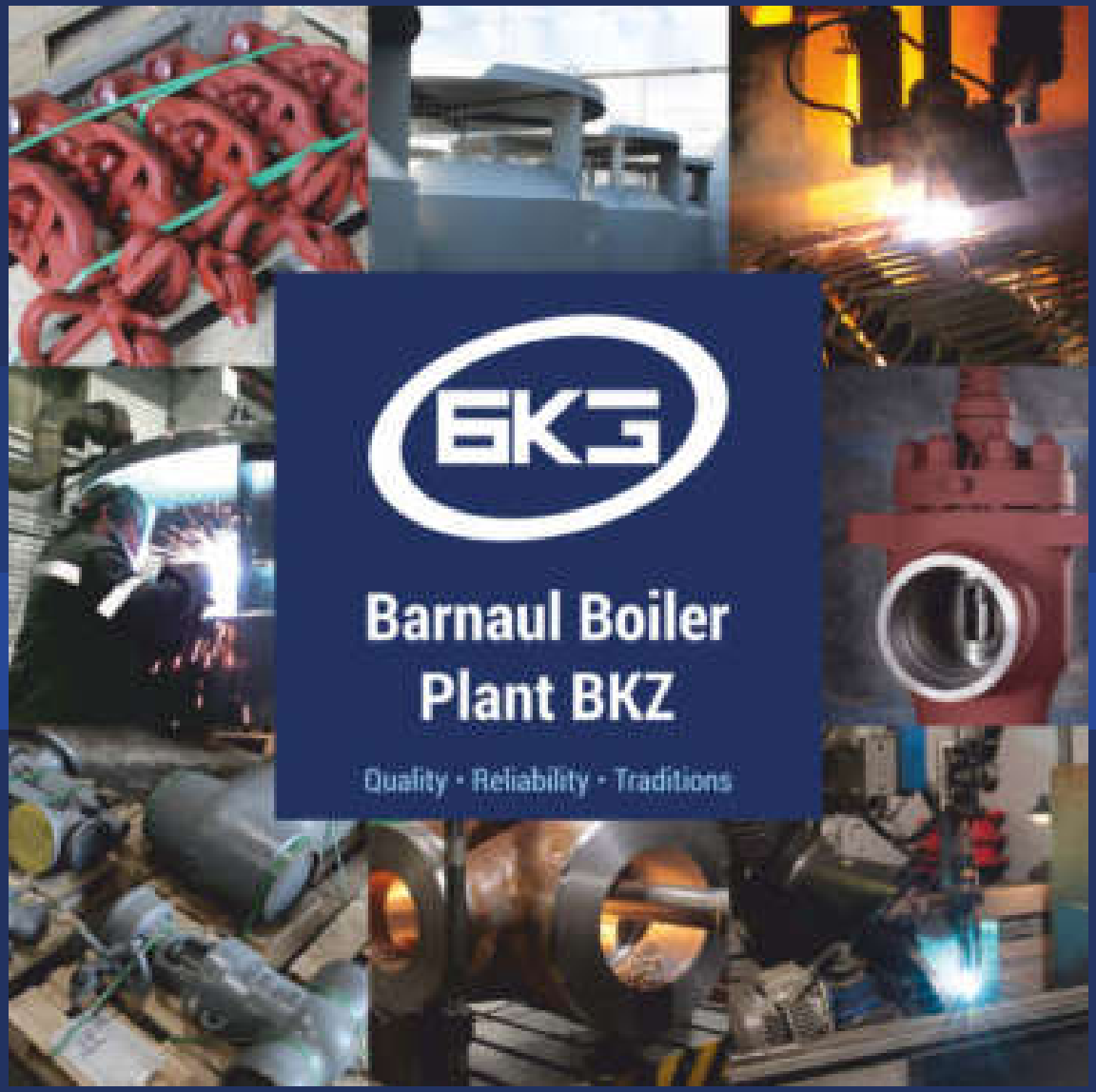

CATALOGUE 2020

Power Valves
and Equipment
for Heat and Power
Complex

bkzn.ru

Barnaul Boiler Plant BKZ

Quality · Reliability · Traditions

Manufacture of power valves and equipment according to the catalogue or calculation of the terms of reference under the international standard GOST R ISO 9001:2015

Major product types manufactured by BBP, LLC:

Steam and Water Power Valves
Isolation, safety and control valves
DN 6–1400, PN 0,1–50 MPa, Tmax = 560˚C
TR 2913-001-15365247-2004, TR 3740-002-15365247-2004

Built-in and Core Type Electric Actuators
Mtrq from 80 N·m to 8800 N·m, TR 28.14.20-006-15365247-2016

Pressure-Reducing and Desuperheating Stations, FRPRDS, DS, PRS
Performance capacity up to 1 000 t/h Pp≤ 27 MPa; Tmax = 560˚C
TR 3113-003-15365247-2009

Noise Dampers of Steam and Gas Discharge into the Atmosphere
P to the discharge valve≤ 27 MPa, Tmax = 560˚C
TR 3113-004-15365247-2011

Control Cabinets of PRDS (DS, PRS, FRPRDS); POSV; electric and pneumatic fittings
Remote automatic control and industrial process management of steam preparation to the specified accuracy TR 27.12.31-007-15365247-2016

According to an independent survey of energy companies by the Fuel and Energy Complex Rating Center in 2019, the products of the Barnaul Boiler Plant received the highest customer ratings in the nominations “Boiler Equipment” and “Pipe Fittings”.



About the Plant

- Barnaul Boiler Plant was established in Barnaul in 2003. The full-fledged high-tech production of power fittings was arranged almost from scratch.
- Currently, Barnaul Boiler Plant is a Russian modern and high-technology enterprise. This is a leading manufacturer of power fittings and equipment for heat and power complex, chemical, petrochemical, mining and processing, as well as food industries at the Russian market.
- The products of BBP, LLC are successfully operated both in the domestic enterprises and abroad.

Цифры и факты

17 years of successful operation

8600 sq. m of industrial areas

220 high-qualified employees

1000+ valves versions

10 patents for inventions

22% of the power fitting volume sold at the domestic market

Advantages of the products of BBP, LLC

- The high-pressure fittings are manufactured in forged and cast bodies.
- The sealing surfaces are hard-faced with materials based on cobalt and cobalt-bearing alloys, increasing turnaround intervals up to 10 times.
- 100% of the output products are certified for compliance with the requirements of the following technical regulations:
  - CU TR 010/2011 – “On safety of machines and equipment”,
  - CU TR 032/2013 – “On safety of equipment operating under excessive pressure”,
  - CU TR 012/2011 – “On safety of equipment intended for use in explosive atmospheres”,
  - CU TR 004/2011 – “On safety of low-voltage equipment”,
  - CU TR 020/2011 – “Electromagnetic compatibility of technical means”.
- The quality of the output products is guaranteed by the quality management system in force at the enterprise, certified under the international standard GOST ISO 9001:2011 (ISO 9001-2015).
- The non-destructive test is carried out on the state-of-the-art equipment in the plant laboratory of metals and heat treatment certified by the Attestation Regional Center of Non-Destructive Test Specialists.
- All structural subdivisions and production stages, beginning from the development of design documents to the performance of acceptance tests, are located within the plant territory.
- We develop an automation system.
- We complete and equip the output equipment with electric actuators, control cabinets, as well as control and measuring instruments.
- We provide services for commissioning of the equipment: control of installation; verification of settings and putting into operation.
- We are a manufacturer of structures of valves, PRDS, noise dampers, electric actuators of fittings and we produce all the product range according to our own Technical Regulations.

CONTENTS

Terms and Definitions

μ **Fluid Flow Coefficient**
The ratio of the fluid mass flow rate at equal parameters through a pressure safety valve to the fluid consumption through an ideal nozzle with a sectional area equal to the area of the narrowest section of the valve seat.

ζ **Resistance Coefficient**
The relation of the lost pressure to the velocity (dynamic) pressure in the phantom (accepted) passage area.
Note. The resistance coefficient shall be specified for isolation fittings in case of the fully open position of the gate (full stroke performance for the fittings opening), unless otherwise provided in the technical documentation.

DN **Nominal Diameter (mm)**
This is a parameter applied for pipeline systems as a characteristic of the connected fitting parts. Note. The nominal diameter is approximately equal to the inner diameter of the pipeline mounted, expressed in millimeters and corresponding to the nearest value from the sequence of numbers accepted in accordance with the established procedure.

F **Seat Area (cm^2)**
This is the smallest sectional area of the seat flow part.

h **Fitting Stroke (mm)**
This is movement of a blocking or control element, calculated from the gate closed position.
Note. A stroke for valves and gates is linear (mm) movement, and a stroke for disk valves and gates is a turning angle of the blocking or control element.

Kv **Throughput Capability (m/h^3)**
This is a value numerically equal to the working medium flow with the density of 1000 kg/m3, flowing through the fittings at the pressure differential of 0,1 MPa (1 kgf/cm). 2 Note. This is the mass flow of the working medium through the pressure safety valve with regard to the pressure safety valve.

PN **Nominal Pressure (Mpa)**
This is the biggest excess working pressure at the working medium temperature of 293 K (20 °C), ensuring the target service life (resource) of the fittings body parts, having definite sizes justified through the calculation of strength at the chosen materials and strength characteristics at the temperature of 293 K (20 °C).

P **Operating Pressure (MPa)**
This is the biggest excess pressure in case of which the continuous fittings operation is possible at the chosen materials and prescribed temperature.

Tmax **Maximum Design Temperature (°C)**
This is temperature of the fitting body wall, equal to the maximum arithmetic mean value of temperatures on its inner and outer surfaces in one section under normal operating conditions.

Mкр **Spindle Torque (Nm)**
This is the torque of inner forces appearing in any spindle section under torsion and turning this section around the spindle longitudinal axle.

t **Response time (s)**
The length of time during which the armature is actuated, that is, the movement of the locking element from one extreme position to the other.

Globe Valves

Purpose

They are only used for opening or blocking of pipelines by means of reciprocative movement of the shut-off device. The globe valves refer to the stop valves of two-position action.

Technical specifications

Pipeline connection: welded connection.

Installation position on the pipeline: any position in the upper semi-sphere with regard to the neck. The valves (globe valves) are intended for outdoor installation and installation in closed premises.

Working medium supply direction: we recommend using of medium flow direction under the gate.

Gate sealability: according to class A GOST 9544-2015.

Climatic version: У, УХЛ, Т according to GOST 15150-69.

Placement category: 1, 2, 3 according to GOST 15150-69.

Manual override force (handwheel, lever): not more than 300 N.

The valves DN10 – DN65 may be manufactured with an easily replaceable seat from titanium or nickel alloy upon the customer's demand.

Control

The globe valve control is carried out with the help of:

- a lever or handwheel (M);
- a built-in electric actuator (E);
- a cylindrical reduction gear unit (Ц);
- a cone reduction gear unit (K).

The valve configuration is adapted to application of electric actuators manufactured by the following companies:

- Э – CHZEM, Chekhov;
- ЭГ – GZ Elektroprivod, Moscow;
- ЭЧ – ABS ZEIM Automation, OJSC, Cheboksary;
- ЭН – BETRO-Tech, Berdsk;
- ЭМ – Tulaelektroprivod, Tula;
- ЭК – ZPA Pecky, Czechia;
- ЭД – AUMA, Germany;
- other manufacturers with standard connection units.

Acceptable use

The allowed values of operating pressures and temperatures for the fittings may differ from those ones given in the table with technical specifications and are chosen in accordance with GOST 356-80, provided that they shall not exceed the limits prescribed by the respective State Supervision Rules and Standards for these materials and operation conditions.

According to GOST 356-80, the **items designed for the ultimate pressure** allow their application on operating parameters within the following range:

- at PN 10 MPa – from 10 MPa, 200 °C to 3,6 MPa, 455 °C;
- at PN 25 MPa – from 25 MPa, 200 °C to 9 MPa, 455 °C;
- at PN 6,3 MPa – from 6,3 MPa, 200 °C to 2,3 MPa, 455 °C.

Globe Valves

Identification	DN, mm	PN, MPa	Tmax of the Medium, °C	Body Material, Steel	Working Medium	ζ, not more than	Мкр., N•m, not more than	Operating Stroke, mm	Full Stroke Rotation Number	D, mm	D1, mm	L, mm	d, mm	H, mm	h, mm	Electric Actuator Identification	N, kW	t of the Stroke, sec.	Weight without Electric Actuator, kg	Full Weight, kg	Control Method	Figure
1213-6-0	6	10	450	30Х13	Water-Steam	-	15	6	3	-	-	-	-	-	-	-	-	-	0,4	-	М	1
1с-17-2	10	13,7*	560	12Х1МФ	Steam	-	15	4	3	-	-	-	-	-	-	-	-	-	0,7	-	М	2
1093-10-0	10	13,7*	560	12Х1МФ	Steam	-	15	4	2	-	-	-	-	-	-	-	-	-	1,1	-	М	10
1с-11-1М	10	10	450	20	Water-Steam	3,8	15	15	3,5	10	16	110	150	226	198	-	-	-	3,1	-	М	3
1с-12-1	10	25	350	20	Water	3,8	15	15	3,5	10	16	110	150	226	198	-	-	-	3,1	-	М	3
1с-12-1ЭЧ	10	25	350	20	Water	3,8	15	15	3,5	10	16	110	-	525	497	ПЭМ-А12М	0,25	9,0	4,0	27,0	Э	8
1с-12-1ЭН	10	25	350	20	Water	3,8	15	15	3,5	10	16	110	-	472	444	ЭП-3-100-24-А1-05-В	0,45	9,0	4,0	18,0	Э	8
1с-13-1	10	16,5*	560	12Х1МФ	Steam	3,8	15	15	3,5	10	16	110	150	226	198	-	-	-	3,1	-	М	3
588-10-0	10	37,3*	280	20	Water	3,8	25	15	3,5	10	16	110	150	226	198	-	-	-	3,1	-	М	3
1с-14-1ЭЧ	10	37,3*	280	20	Water	3,8	25	15	3,5	10	16	110	-	525	497	ПЭМ-А12М	0,46	9,0	3,1	27,0	Э	8
1с-14-1ЭН	10	37,3*	280	20	Water	3,8	25	15	3,5	10	16	110	-	472	444	ЭП-3-100-24-А1-05-В	0,45	9,0	3,1	18,0	Э	8
589-10-0	10	25*	545	12Х1МФ	Steam	3,8	25	15	3,5	10	16	110	150	226	198	-	-	-	3,1	-	М	3
1с-15-1ЭЧ	10	25*	545	12Х1МФ	Steam	3,8	25	15	3,5	10	16	110	150	525	497	ПЭМ-А12М	0,25	9,0	4,0	27,0	Э	8
1с-15-1ЭН	10	25*	545	12Х1МФ	Steam	3,8	25	15	3,5	10	16	110	150	472	444	ЭП-3-100-24-А1-05-В	0,45	9,0	4,0	18,0	Э	8
1456-10-0	10	10	450	09Г2С	Water-Steam	3,8	5	6	4	10	16	70	80	100	81	-			0,4	-	М	11
1с-11-2	15	10	450	20	Water-Steam	5,0	80	20	5	16	25	160	200	310	260	-	-	-	5,4	-	М	4
1с-15-2	15	25*	545	12Х1МФ	Steam	5,0	80	20	5	16	28	160	200	310	260	-	-	-	5,4	-	М	4
1с-12-2	15	25	350	20	Water-Steam	5,0	80	20	5	16	25	160	200	310	260	-	-	-	5,4	-	М	4
1с-11-3М	20	10	450	20	Water-Steam	5,0	80	20	5	22	32	160	200	310	260	-	-	-	5,4	-	М	4
1с-11-3ЭГ	20	10	450	20	Water-Steam	5,0	80	20	5	22	32	160	-	674	626	ГЗ-А.100/24	0,25	12,5	10,1	48,1	Э	8
1с-11-3ЭЧ	20	10	450	20	Water-Steam	5,0	80	20	5	22	32	160	-	823	775	ПЭМ-А9М	0,25	12,5	10,1	33,1	Э	8
1с-11-3ЭК	20	10	450	20	Water-Steam	5,0	80	20	5	22	32	160	-	628	580	MODACT MON 52030.22E2N	0,37	12,0	10,1	37,1	Э	8
1с-11-3ЭМ	20	10	450	20	Water-Steam	5,0	80	20	5	22	32	160	-	652	716	Н-А2-08К	0,25	10,0	10,1	30,1	Э	8
1с-11-3ЭД	20	10	450	20	Water-Steam	5,0	80	20	5	22	32	160	-	708	660	AUMA SA10.2-F10-380/50/3-22	0,25	14,0	10,1	34,1	Э	8
1с-11-3ЭН	20	10	450	20	Water-Steam	5,0	80	20	5	22	32	160	-	588	540	ЭП-3-100-24-А2-05-В	0,45	12,5	10,1	24,1	Э	8
1с-12-3	20	25	350	20	Water	5,0	80	20	5	22	32	160	200	310	260	-	-	-	5,4	-	М	4
1с-12-3ЭГ	20	25	350	20	Water	5,0	80	20	5	22	32	160	-	674	626	ГЗ-А.100/24	0,25	12,5	10,1	48,1	Э	8
1с-12-3ЭЧ	20	25	350	20	Water	5,0	80	20	5	22	32	160	-	823	775	ПЭМ-А9М	0,25	12,5	10,1	33,1	Э	8
1с-12-3ЭК	20	25	350	20	Water	5,0	80	20	5	22	32	160	-	628	580	MODACT MON 52030.22E2N	0,37	12,0	10,1	37,1	Э	8
1с-12-3ЭМ	20	25	350	20	Water	5,0	80	20	5	22	32	160	-	762	716	Н-А2-08К	0,25	10,0	10,1	30,1	Э	8
1с-12-3ЭД	20	25	350	20	Water	5,0	80	20	5	22	32	160	-	708	660	AUMA SA10.2-F10-380/50/3-22	0,25	14,0	10,1	34,1	Э	8
1с-12-3ЭН	20	25	350	20	Water	5,0	80	20	5	22	32	160	-	588	540	ЭП-3-100-24-А2-05-В	0,45	12,5	10,1	24,1	Э	8
1с-13-3	20	16,5*	560	12Х1МФ	Steam	5,0	80	20	5	22	32	160	200	310	260	-	-	-	5,4	-	М	4
1с-13-3ЭГ	20	16,5*	560	12Х1МФ	Steam	5,0	80	20	5	22	32	160	-	674	626	ГЗ-А.100/24	0,25	12,5	10,1	48,1	Э	8
1с-13-3ЭЧ	20	16,5*	560	12Х1МФ	Steam	5,0	80	20	5	22	32	160	-	823	775	ПЭМ-А9М	0,25	12,5	10,1	33,1	Э	8
1с-13-3ЭК	20	16,5*	560	12Х1МФ	Steam	5,0	80	20	5	22	32	160	-	628	580	MODACT MON 52030.22E2N	0,37	12	10,1	37,1	Э	8
1с-13-3ЭМ	20	16,5*	560	12Х1МФ	Steam	5,0	80	20	5	22	32	160	-	762	716	Н-А2-08К	0,25	10	10,1	30,1	Э	8
1с-13-3ЭД	20	16,5*	560	12Х1МФ	Steam	5,0	80	20	5	22	32	160	-	708	660	AUMA SA10.2-F10-380/50/3-22	0,25	14	10,1	34,1	Э	8
1с-13-3ЭН	20	16,5*	560	12Х1МФ	Steam	5,0	80	20	5	22	32	160	-	588	540	ЭП-3-100-24-А2-05-В	0,45	12,5	10,1	24,1	Э	8
998-20-0	20	37,3*	280	20	Water	5,0	80	20	5	20	32	160	200	310	260	-	-	-	5,4	-	М	4
998-20-Г	20	37,3*	280	20	Water	5,0	80	20	5	20	32	160	200	355	305	-	-	-	6,9	-	М	5
998-20-Э	20	37,3*	280	20	Water	5,0	80	20	5	20	32	160	-	568	522	821-Э-0а	0,37	12,5	7,0	25,0	Э	8
998-20-ЭГ	20	37,3*	280	20	Water	5,0	80	20	5	20	32	160	-	674	626	ГЗ-А.100/24	0,25	12,5	10,1	48,1	Э	8
998-20-ЭЧ	20	37,3*	280	20	Water	5,0	80	20	5	20	32	160	-	823	775	ПЭМ-А9М	0,25	12,5	10,1	33,1	Э	8
998-20-ЭК	20	37,3*	280	20	Water	5,0	80	20	5	20	32	160	-	628	580	MODACT MON 52030.22E2N	0,37	12	10,1	37,1	Э	8
998-20-ЭМ	20	37,3*	280	20	Water	5,0	80	20	5	20	32	160	-	762	716	Н-А2-08К	0,25	10	10,1	30,1	Э	8
998-20-ЭД	20	37,3*	280	20	Water	5,0	80	20	5	20	32	160	-	708	660	AUMA SA10.2-F10-380/50/3-22	0,25	14	10,1	34,1	Э	8
998-20-ЭН	20	37,3*	280	20	Water	5,0	80	20	5	20	32	160	-	588	540	ЭП-3-100-24-А2-05-В	0,45	12,5	10,1	24,1	Э	8
999-20-0	20	25*	545	12Х1МФ	Steam	5,0	80	20	5	20	32	160	200	310	260	-	-	-	5,4	-	М	4
999-20-Г	20	25*	545	12Х1МФ	Steam	5,0	80	20	5	20	32	160	200	355	305	-	-	-	6,9	-	М	5
999-20-Э	20	25*	545	12Х1МФ	Steam	5,0	80	20	5	20	32	160	-	568	522	821-Э-0а	0,37	12,5	7,0	25,0	Э	8

** - Pressure, P*

Globe Valves

Identification	DN, mm	PN, MPa	Tmax of the Medium, °C	Body Material, Steel	Working Medium	ζ, not more than	Мкр., N•m, not more than	Operating Stroke, mm	Full Stroke Rotation Number	D, mm	D1, mm	L, mm	d, mm	H, mm	h, mm	Electric Actuator Identification	N, kW	t of the Stroke, sec.	Weight without Electric Actuator, kg	Full Weight, kg	Control Method	Figure
999-20-ЭГ	20	25*	545	12Х1МФ	Steam	5,0	80	20	5	20	32	160		674	626	ГЗ-А.100/24	0,25	12,5	10,1	48,1	Э	8
999-20-ЭЧ	20	25*	545	12Х1МФ	Steam	5,0	80	20	5	20	32	160	-	823	775	ПЭМ-А9М	0,25	12,5	10,1	33,1	Э	8
999-20-ЭК	20	25*	545	12Х1МФ	Steam	5,0	80	20	5	20	32	160	-	628	580	MODACT MON 52030.22E2N	0,37	12	10,1	37,1	Э	8
999-20-ЭМ	20	25*	545	12Х1МФ	Steam	5,0	80	20	5	20	32	160	-	762	716	Н-А2-08К	0,25	10	10,1	30,1	Э	8
999-20-ЭД	20	25*	545	12Х1МФ	Steam	5,0	80	20	5	20	32	160	-	708	660	AUMA SA10.2-F10-380/50/3-22	0,25	14	10,1	34,1	Э	8
999-20-ЭН	20	25*	545	12Х1МФ	Steam	5,0	80	20	5	20	32	160	-	588	540	ЭП-3-100-24-А2-05-В	0,45	12,5	10,1	24,1	Э	8
1456-20-0	20	25	450	09Г2С	Water-Steam	5,0	40	12,5	4	21	30	120	160	167	133	-	-	-	4,2	-	М	11
1с-11-31	25	10	450	20	Water-Steam	5,0	80	20	5	26	32	160	200	310	260	-	-	-	5,4	-	М	4
1с-11-31ЭГ	25	10	450	20	Water-Steam	5,0	80	20	5	26	32	160	-	674	626	ГЗ-А.100/24	0,25	12,5	10,1	48,1	Э	8
1с-11-31ЭЧ	25	10	450	20	Water-Steam	5,0	80	20	5	26	32	160	-	823	775	ПЭМ-А9М	0,25	12,5	10,1	33,1	Э	8
1с-11-31ЭК	25	10	450	20	Water-Steam	5,0	80	20	5	26	32	160	-	628	580	MODACT MON 52030.22E2N	0,37	12	10,1	37,1	Э	8
1с-11-31ЭМ	25	10	450	20	Water-Steam	5,0	80	20	5	26	32	160	-	762	716	Н-А2-08К	0,25	10	10,1	30,1	Э	8
1с-11-31ЭД	25	10	450	20	Water-Steam	5,0	80	20	5	26	32	160	-	708	660	AUMA SA10.2-F10-380/50/3-22	0,25	14	10,1	34,1	Э	8
1с-11-31ЭН	25	10	450	20	Water-Steam	5,0	80	20	5	26	32	160	-	588	540	ЭП-3-100-24-А2-05-В	0,45	12,5	10,1	24,1	Э	8
1456-25-М	25	10	450	09Г2С	Water-Steam	5,0	40	17	4	25	35	160	160	196	150	-	-	-	5,2	-	М	11
1с-12-4	32	10	450	20	Water-Steam	6,4	80	25	6	32	38	230	260	331	284	-	-	-	6,1	-	М	4
1с-12-4ЭГ	32	10	450	20	Water-Steam	6,4	80	25	6	32	38	230	-	688	640	ГЗ-А.100/24	0,45	15	10,8	48,8	Э	8
1с-12-4ЭЧ	32	10	450	20	Water-Steam	6,4	80	25	6	32	38	230	-	842	795	ПЭМ-А9М	0,25	15	10,8	33,8	Э	8
1с-12-4ЭК	32	10	450	20	Water-Steam	6,4	80	25	6	32	38	230	-	648	600	MODACT MON 52030.22E2N	0,37	14,5	10,8	37,8	Э	8
1с-12-4ЭМ	32	10	450	20	Water-Steam	6,4	80	25	6	32	38	230	-	782	735	Н-А2-08К	0,25	10	10,8	30,8	Э	8
1с-12-4ЭД	32	10	450	20	Water-Steam	6,4	80	25	6	32	38	230	-	728	680	AUMA SA10.2-F10-380/50/3-22	0,25	16,5	10,8	34,8	Э	8
1с-12-4ЭН	32	10	450	20	Water-Steam	6,4	80	25	6	32	38	230	-	608	560	ЭП-3-100-24-А2-05-В	0,45	15	10,8	24,8	Э	8
1055-32-0	32	25*	545	12Х1МФ	Steam	7,0	250	35	6	31	57	220	320	618	529	-	-	-	34	-	М	6
1055-32-ЦЗ	32	25*	545	12Х1МФ	Steam	7,0	250	35	6	31	57	220	-	735	650	-	-	-	60	-	Ц	7
1055-32-Э	32	25*	545	12Х1МФ	Steam	7,0	250	35	6	31	57	220	-	805	720	792-Э-0а-01	1,32	18	32	132	Э	9
1055-32-ЭГ	32	25*	545	12Х1МФ	Steam	7,0	250	35	6	31	57	220	-	928	838	ГЗ-Б.300/24	0,75	15	34	87	Э	9
1055-32-ЭЧ	32	25*	545	12Х1МФ	Steam	7,0	250	35	6	31	57	220	-	1240	1150	ПЭМ-Б0М	0,55	15	34	70	Э	9
1055-32-ЭК	32	25*	545	12Х1МФ	Steam	7,0	250	35	6	31	57	220	-	970	880	MODACT MON 52032.12J2N	1,1	15	34	82	Э	9
1055-32-ЭМ	32	25*	545	12Х1МФ	Steam	7,0	250	35	6	31	57	220	-	944	859	Н-Б1-07	1,32	14	34	87	Э	9
1055-32-ЭД	32	25*	545	12Х1МФ	Steam	7,0	250	35	6	31	57	220	-	1070	980	AUMA SA14.6-F14-380/50/3-22	0,8	17	34	80	Э	9
1055-32-ЭН	32	25*	545	12Х1МФ	Steam	7,0	250	35	6	31	57	220	-	900	810	ЭП-3-300-25-Б1-0-А	0,75	15	34	72	Э	9
1456-32-0	32	10	450	09Г2С	Water-Steam	7,7	40	17	4,5	34	40	160	160	196	150	-	-	-	4,8	-	М	11
1054-40-0	40	37,3*	280	20	Water	7,0	300	35	6	39	57	220	320	618	529	-	-	-	34	-	М	6
1054-40-ЦЗ	40	37,3*	280	20	Water	7,0	300	35	6	39	57	220	-	735	650	-	-	-	60	-	Ц	7
1054-40-Э	40	37,3*	280	20	Water	7,0	300	35	6	39	57	220	-	805	720	792-Э-0а-01	1,32	18	32	132	Э	9
1054-40-ЭГ	40	37,3*	280	20	Water	7,0	300	35	6	39	57	220	-	928	838	ГЗ-Б.300/24	0,75	15	34	87	Э	9
1054-40-ЭЧ	40	37,3*	280	20	Water	7,0	300	35	6	39	57	220	-	1240	1150	ПЭМ-Б0М	0,55	15	34	70	Э	9
1054-40-ЭК	40	37,3*	280	20	Water	7,0	300	35	6	39	57	220	-	970	880	MODACT MON 52032.12J2N	1,1	15	34	82	Э	9
1054-40-ЭМ	40	37,3*	280	20	Water	7,0	300	35	6	39	57	220	-	944	859	Н-Б1-07	1,32	14	34	87	Э	9
1054-40-ЭД	40	37,3*	280	20	Water	7,0	300	35	6	39	57	220	-	1070	980	AUMA SA14.6-F14-380/50/3-22	0,8	17	34	80	Э	9
1054-40-ЭН	40	37,3*	280	20	Water	7,0	300	35	6	39	57	220	-	900	810	ЭП-3-300-25-Б1-0-А	0,75	15	34	72	Э	9
1с-11-5	50	6,3	425	20	Water-Steam	12,7	80	25	6	50	57	240	320	360	292	-	-	-	8,6	-	М	4
1с-11-5ЭГ	50	6,3	425	20	Water-Steam	12,7	80	25	6	50	57	240	-	721	653	ГЗ-А.100/24	0,45	15	12,5	50,5	Э	8
1с-11-5ЭЧ	50	6,3	425	20	Water-Steam	12,7	80	25	6	50	57	240	-	873	807	ПЭМ-А9М	0,25	15	12,5	35,5	Э	8
1с-11-5ЭК	50	6,3	425	20	Water-Steam	12,7	80	25	6	50	57	240	-	675	607	MODACT MON 52030.22E2N	0,37	14,5	12,5	39,5	Э	8
1с-11-5ЭМ	50	6,3	425	20	Water-Steam	12,7	80	25	6	50	57	240	-	809	743	Н-А2-08К	0,25	10	12,5	32,5	Э	8
1с-11-5ЭД	50	6,3	425	20	Water-Steam	12,7	80	25	6	50	57	240	-	755	687	AUMA SA10.2-F10-380/50/3-22	0,25	16,5	12,5	36,5	Э	8
1с-11-5ЭН	50	6,3	425	20	Water-Steam	12,7	80	25	6	50	57	240	-	635	567	ЭП-3-100-24-А2-05-В	0,45	15	12,5	26,5	Э	8
1456-50-0	50	10	450	09Г2С	Water-Steam	12,7	70	20	4	51	62	220	260	278	211	-	-	-	9,0	-	М	11
1456-50-ЦЗ	50	10	450	09Г2С	Water-Steam	12,7	70	20	4	51	62	220	320	703	636	-	-	-	58	-	Ц	7

** - Pressure, P*

Identification	DN, mm	PN, MPa	Tmax of the Medium, °C	Body Material, Steel	Working Medium	ζ, not more than	Мкр., N•m, not more than	Operating Stroke, mm	Full Stroke Rotation Number	D, mm	D1, mm	L, mm	d, mm	H, mm	h, mm	Electric Actuator Identification	N, kW	t of the Stroke, sec.	Weight without Electric Actuator, kg	Full Weight, kg	Control Method	Figure
1456-50-ЭГ	50	10	450	09Г2С	Water-Steam	12,7	100	20	4	51	62	220	-	856	789	ГЗ-А.100/24	0,45	10	27,5	65,5	Э	9
1456-50-ЭЧ	50	10	450	09Г2С	Water-Steam	12,7	100	20	4	51	62	220	-	982	915	ПЭМ-А9М	0,25	10	27,5	44,5	Э	9
1456-50-ЭК	50	10	450	09Г2С	Water-Steam	12,7	100	20	4	51	62	220	-	810	743	MODACT MON 52030.22E2N	0,37	10	27,5	53,5	Э	9
1456-50-ЭМ	50	10	450	09Г2С	Water-Steam	12,7	100	20	4	51	62	220	-	1003	936	Н-А2-08К	0,25	10	27,5	44,5	Э	9
1456-50-ЭД	50	10	450	09Г2С	Water-Steam	12,7	100	20	4	51	62	220	-	931	864	AUMA SA10.2-F10-380/50/3-22	0,25	11	27,5	39,5	Э	9
1456-50-ЭН	50	10	450	09Г2С	Water-Steam	12,7	100	20	4	51	62	220	-	719	652	ЭП-3-100-24-А2-05-В	0,45	10	27,5	41,5	Э	9
1с-12-5	50	25	350	20	Water	7,0	250	35	6	49	60	220	320	618	529	-	-	-	34	-	М	6
1с-12-5ЦЗ	50	25	350	20	Water	7,0	250	35	6	49	60	220	-	735	650	-	-	-	60	-	Ц	7
1с-12-5ЭГ	50	25	350	20	Water	7,0	250	35	6	49	60	220	-	965	870	ГЗ-Б.300/24	0,75	15	42	95	Э	9
1с-12-5ЭЧ	50	25	350	20	Water	7,0	250	35	6	49	60	220	-	1240	1150	ПЭМ-Б0М	0,55	15	34	70	Э	9
1с-12-5ЭК	50	25	350	20	Water	7,0	250	35	6	49	60	220	-	970	880	MODACT MON 52032.12J2N	1,1	15	34	82	Э	9
1с-12-5ЭМ	50	25	350	20	Water	7,0	250	35	6	49	60	220	-	1043	954	Н-Б1-07	1,32	14	34	104	Э	9
1с-12-5ЭД	50	25	350	20	Water	7,0	250	35	6	49	60	220	-	1070	980	AUMA SA14.6-F14-380/50/3-22	0,8	17	34	80	Э	9
1с-12-5ЭН	50	25	350	20	Water	7,0	250	35	6	49	60	220	-	900	810	ЭП-3-300-25-Б1-0-А	0,75	15	42	80	Э	9
1053-50-0	50	13,7*	560	12Х1МФ	Steam	7,0	250	35	6	50	76	250	320	634	539	-	-	-	42	-	М	6
1053-50-ЦЗ	50	13,7*	560	12Х1МФ	Steam	7,0	250	35	6	50	76	250	-	755	660	-	-	-	62	-	Ц	7
1053-50-Э	50	13,7*	560	12Х1МФ	Steam	7,0	250	35	6	50	76	250	-	825	730	792-Э-0а-01	1,32	18	35	135	Э	9
1053-50-ЭГ	50	13,7*	560	12Х1МФ	Steam	7,0	250	35	6	50	76	250	-	965	870	ГЗ-Б.300/24	0,75	15	42	95	Э	9
1053-50-ЭЧ	50	13,7*	560	12Х1МФ	Steam	7,0	250	35	6	50	76	250	-	1255	1160	ПЭМ-Б0М	0,55	15	42	78	Э	9
1053-50-ЭК	50	13,7*	560	12Х1МФ	Steam	7,0	250	35	6	50	76	250	-	985	890	MODACT MON 52032.12J2N	1,1	15	42	90	Э	9
1053-50-ЭМ	50	13,7*	560	12Х1МФ	Steam	7,0	250	35	6	50	76	250	-	1049	954	Н-Б1-07	1,32	14	42,7	95,7	Э	9
1053-50-ЭД	50	13,7*	560	12Х1МФ	Steam	7,0	250	35	6	50	76	250	-	1085	990	AUMA SA14.6-F14-380/50/3-22	0,8	17	42	88	Э	9
1053-50-ЭН	50	13,7*	560	12Х1МФ	Steam	7,0	250	35	6	50	76	250	-	915	820	ЭП-3-300-25-Б1-0-А	0,75	15	42	80	Э	9
1052-65-0	65	23,5*	250	20	Water	7,0	300	35	6	58	76	250	320	634	539	-	-	-	42	-	М	6
1052-65-ЦЗ	65	23,5*	250	20	Water	7,0	300	35	6	58	76	250	-	755	660	-	-	-	62	-	Ц	7
1052-65-Э	65	23,5*	250	20	Water	7,0	300	35	6	58	76	250	-	825	730	792-Э-0а-01	1,32	18	35	135	Э	9
1052-65-ЭГ	65	23,5*	250	20	Water	7,0	300	35	6	58	76	250	-	965	870	ГЗ-Б.300/24	0,75	15	42	95	Э	9
1052-65-ЭЧ	65	23,5*	250	20	Water	7,0	300	35	6	58	76	250	-	1255	1160	ПЭМ-Б0М	0,55	15	42	78	Э	9
1052-65-ЭК	65	23,5*	250	20	Water	7,0	300	35	6	58	76	250	-	985	890	MODACT MON 52032.12J2N	1,1	15	42	90	Э	9
1052-65-ЭМ	65	23,5*	250	20	Water	7,0	300	35	6	58	76	250	-	1049	954	Н-Б1-07	1,32	14	42,3	95,3	Э	9
1052-65-ЭД	65	23,5*	250	20	Water	7,0	300	35	6	58	76	250	-	1085	990	AUMA SA14.6-F14-380/50/3-22	0,8	17	42	88	Э	9
1052-65-ЭН	65	23,5*	250	20	Water	7,0	300	35	6	58	76	250	-	915	820	ЭП-3-300-25-Б1-0-А	0,75	15	42	80	Э	9
1057-65-0	65	9,8*	540	12Х1МФ	Steam	7,0	250	35	6	62	76	250	320	634	539	-	-	-	42	-	М	6
1057-65-ЦЗ	65	9,8*	540	12Х1МФ	Steam	7,0	250	35	6	62	76	250	-	755	660	-	-	-	62	-	Ц	7
1057-65-Э	65	9,8*	540	12Х1МФ	Steam	7,0	250	35	6	62	76	250	-	825	730	792-Э-0а-01	1,32	18	35	135	Э	9
1057-65-ЭГ	65	9,8*	540	12Х1МФ	Steam	7,0	250	35	6	62	76	250	-	965	870	ГЗ-Б.300/24	0,75	15	42	95	Э	9
1057-65-ЭЧ	65	9,8*	540	12Х1МФ	Steam	7,0	250	35	6	62	76	250	-	1255	1160	ПЭМ-Б0М	0,55	15	42	78	Э	9
1057-65-ЭК	65	9,8*	540	12Х1МФ	Steam	7,0	250	35	6	62	76	250	-	985	890	MODACT MON 52032.12J2N	1,1	15	42	90	Э	9
1057-65-ЭМ	65	9,8*	540	12Х1МФ	Steam	7,0	250	35	6	62	76	250	-	1049	954	Н-Б1-07	1,32	14	42,3	95,3	Э	9
1057-65-ЭД	65	9,8*	540	12Х1МФ	Steam	7,0	250	35	6	62	76	250	-	1085	990	AUMA SA14.6-F14-380/50/3-22	0,8	17	42	88	Э	9
1057-65-ЭН	65	9,8*	540	12Х1МФ	Steam	7,0	250	35	6	62	76	250	-	915	820	ЭП-3-300-25-Б1-0-А	0,75	15	42	80	Э	9
1с-7-1	80	6,3	425	25Л	Water-Steam	6,4	290	72	12	81	93	380	320	550	460	-	-	-	52	-	М	12
1с-8-2	80	10	450	25Л	Water-Steam	6,4	97	72	36	77	93	380	320	725	635	-	-	-	77	-	Ц	13
1с-8-2ЭГ	80	10	450	25Л	Water-Steam	6,4	250	72	12	77	93	380	-	924	834	ГЗ-Б.300/24	0,75	30	58	111	Э	14
1с-8-2ЭЧ	80	10	450	25Л	Water-Steam	6,4	250	72	12	77	93	380	-	1215	1125	ПЭМ-Б2М	0,55	29	58	98	Э	14
1с-8-2ЭК	80	10	450	25Л	Water-Steam	6,4	250	72	12	77	93	380	-	945	855	MODACT MON 52032.12J2N	1,1	29	58	106	Э	14
1с-8-2ЭМ	80	10	450	25Л	Water-Steam	6,4	250	72	12	77	93	380	-	1009	920	Н-Б1-08	1,32	14	58	111	Э	14
1с-8-2ЭД	80	10	450	25Л	Water-Steam	6,4	250	72	12	77	93	380	-	1045	955	AUMA SA14.6-F14-380/50/3-22	0,8	33	58	104	Э	14
1с-8-2ЭН	80	10	450	25Л	Water-Steam	6,4	250	72	12	77	93	380	-	875	785	ЭП-3-300-25-Б1-0-А	0,75	29	58	96	Э	14
1с-9-2	80	10	450	25Л	Water-Steam	6,4	97	72	36	77	93	380	320	540	450	-	-	-	80	-	К	15

** - Pressure, P*

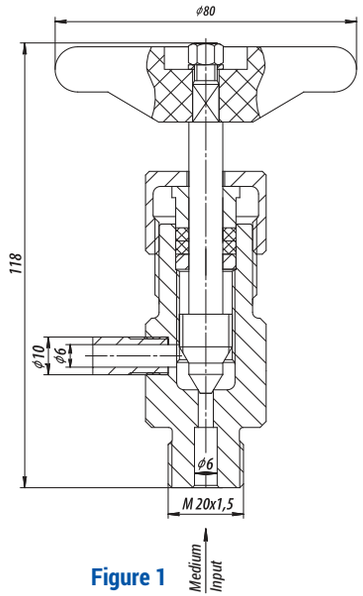

Figure 1
Air Valve

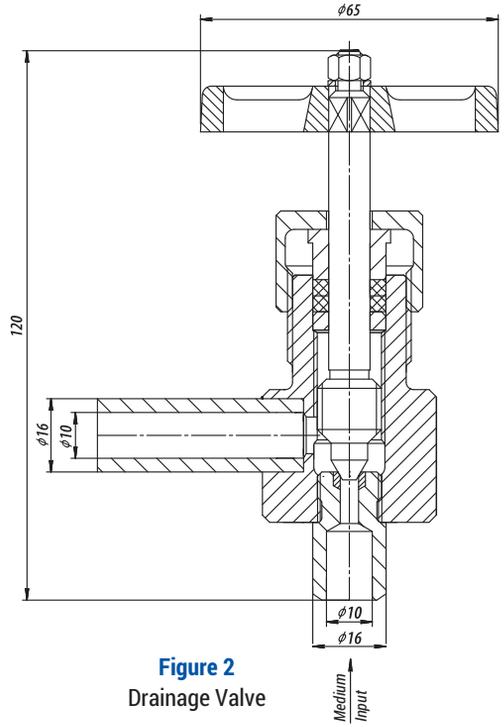

Figure 2
Drainage Valve

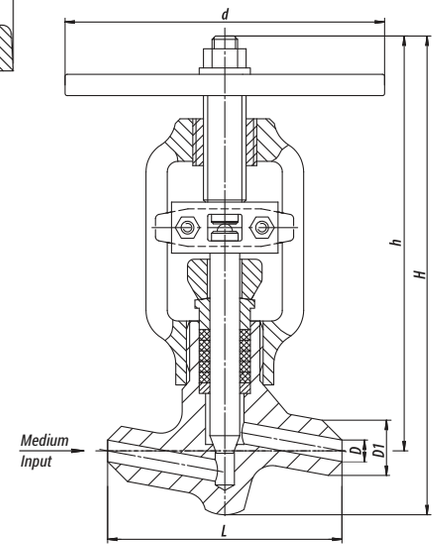

Figure 3
Globe Valve DN10

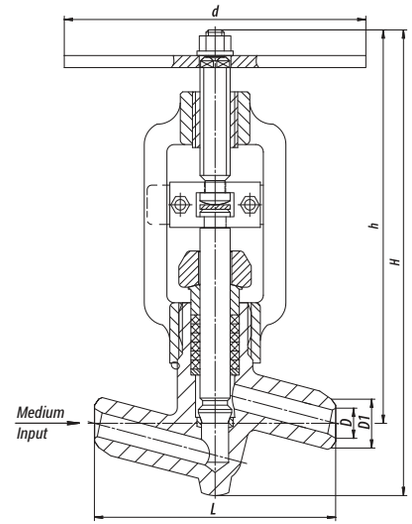

Figure 4
Globe Valve

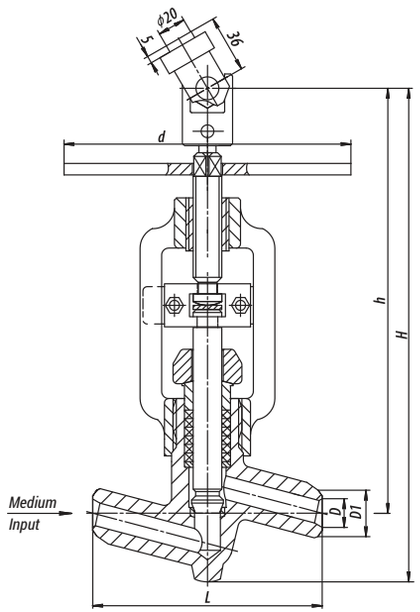

Figure 5
Globe Valve with a Handwheel
and a Universal Joint

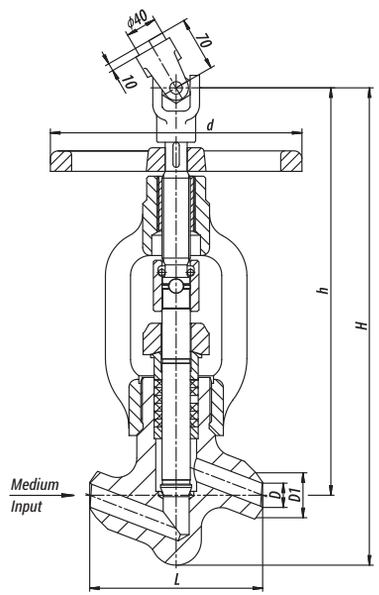

Figure 6
Globe Valve DN32-65

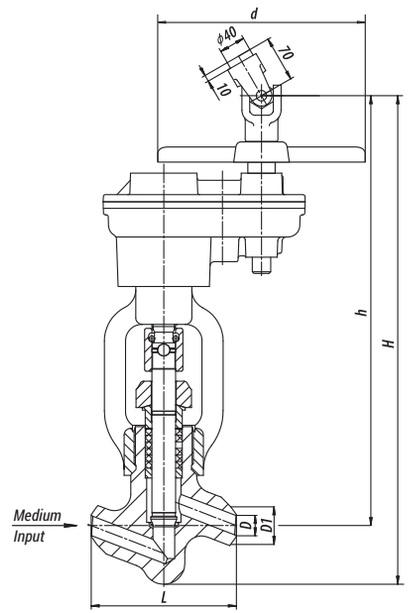

Figure 7
Globe Valve DN32-65
with a Parallel-Shaft Gear Reducer

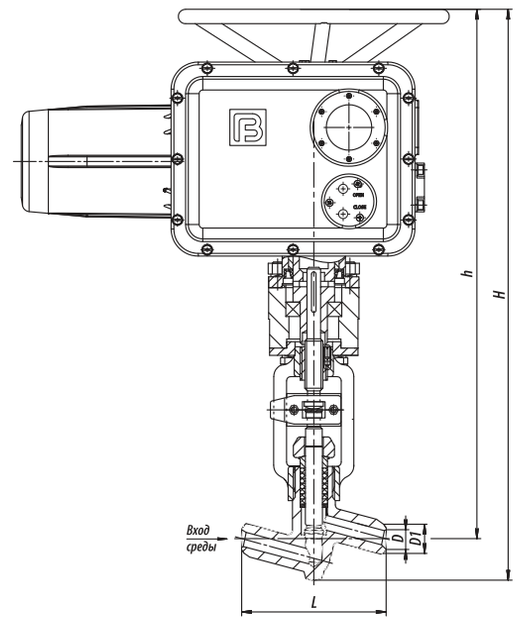

Figure 8
Globe Valve DN10-50
with an Electric Actuator

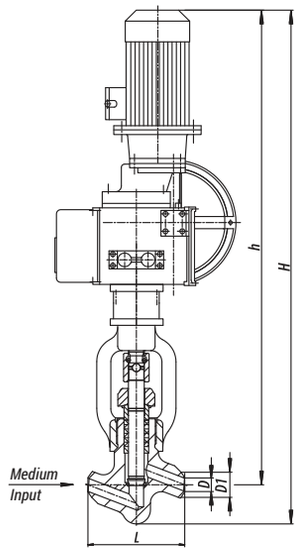

Figure 9
Globe Valve DN32-65
with an Electric Actuator

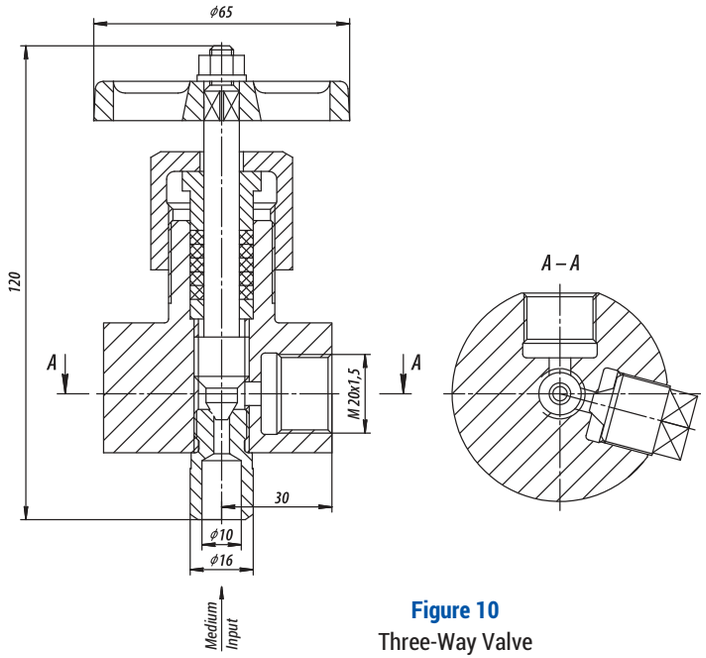

Figure 10
Three-Way Valve

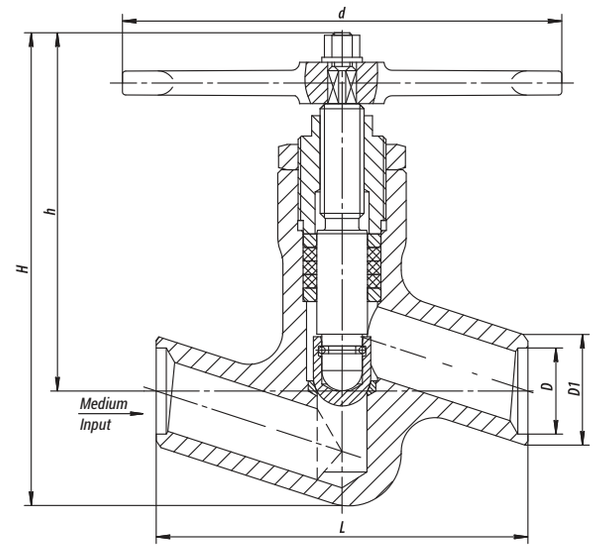

Figure 11
Globe Valve
with Manual Control

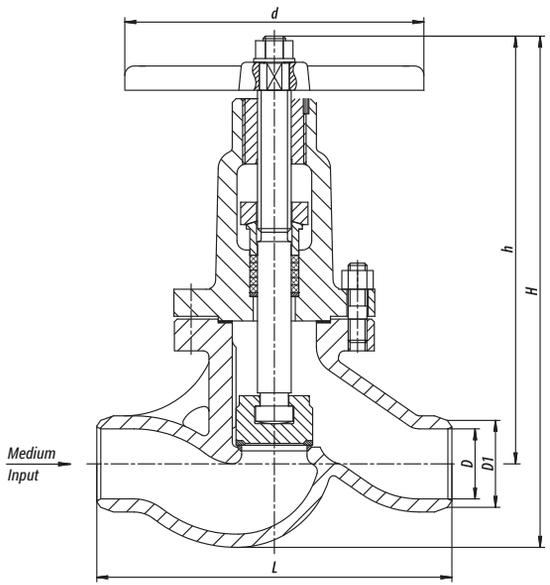

Figure 12
Globe Valve DN80 1c-7

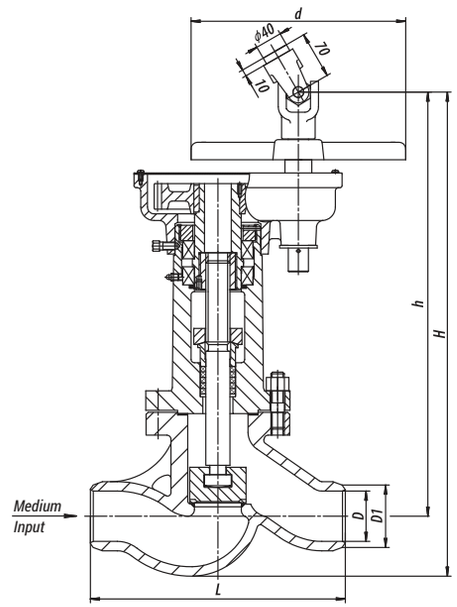

Figure 13
Globe Valve DN80 1c-8

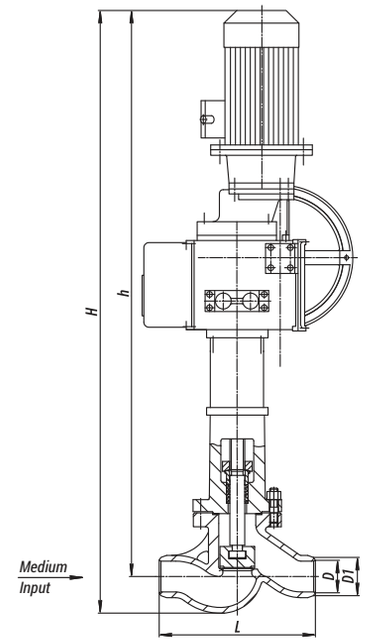

Figure 14
Globe Valve DN80
with an Electric Actuator

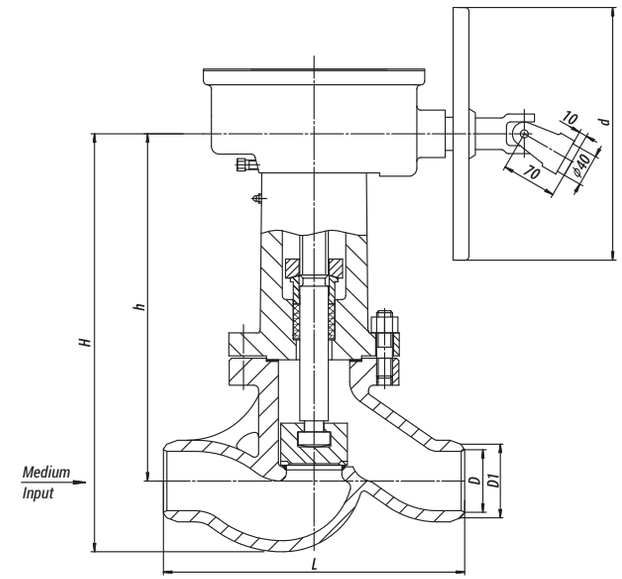

Figure 15
Globe Valve DN80 1c-9

Gate Valves

Purpose

The gate valves serve as devices for leak-free shutdown of water and steam pipelines of the main engineering systems at stations and enterprises.

Application

- They are only used for turning on and off the pipeline. The usage of the gate valves as control devices is not allowed.
- When using gate valves in the pipelines, wherein the heating-up mode at the closed gate and water-filled internal cavity are provided, they shall be equipped with a discharge device. Such device may be produced in form of a pipe connecting the internal cavity of the gate with the pipeline on the side of the medium supply with a valve DN20 installed thereon, or in form of a through hole with the diameter of 5 mm in the plate on the side of the medium supply.

Technical specifications

Pipeline connection: welded connection.
Installation position on the pipeline: any position. When installing gate valves with an electric actuator on vertical areas, an additional mounting support is necessary for the actuator in order to avoid the trolley deformation.
Working medium supply direction: any direction.
Gate sealability: according to class A GOST 9544-2015.
Climatic version: У, ХЛ, УХЛ, Т according to GOST 15150-69.
Placement category: 1, 2, 3 according to GOST 15150-69.
Handwheel force: not more than 300 N.

The globe valve control is carried out with the help of:

- a lever or handwheel (M);
- a built-in electric actuator (E);
- a cylindrical reduction gear unit (Ц);
- a cone reduction gear unit (K).

Control

The valve configuration is adapted to application of electric actuators manufactured by the following companies:

- Э – CHZEM, Chekhov;
- ЭГ – GZ Elektroprivod, Moscow;
- ЭЧ – ABS ZEIM Automation, OJSC, Cheboksary;
- ЭН – BETRO-Tech, Berdsk;
- ЭМ – Tulaelektroprivod, Tula;
- ЭК – ZPA Pecky, Czechia;
- ЭД – AUMA, Germany;
- other manufacturers with standard connection units.

Acceptable use

The allowed values of operating pressures and temperatures for the fittings may differ from those ones given in the table with technical specifications and are chosen in accordance with GOST 356-80, provided that they shall not exceed the limits prescribed by the respective State Supervision Rules and Standards for these materials and operation conditions.

According to GOST 356-80, the **items designed for the ultimate pressure** allow their application on operating parameters within the following range:

- at PN 10 MPa – from 10 MPa, 200 °C to 3,6 MPa, 455 °C;
- at PN 25 MPa – from 25 MPa, 200 °C to 9 MPa, 455 °C;
- at PN 6,3 MPa – from 6,3 MPa, 200 °C to 2,3 MPa, 455 °C.

> We can manufacture the gate valves considering specific working conditions upon the customer's demand.

Identification	DN, mm	PN, MPa	Tmax of the Medium, °C	Body Material, Steel	Working Medium	ζ**, not more than	Мкр., N•m, not more than	Operating Stroke, mm	Full Stroke Rotation Number	D, mm	D1, mm	D saddle, mm	L, mm	d, mm	H, mm	h, mm	Electric Actuator Identification	N, kW	t of the Stroke, sec.	Weight without Electric Actuator, kg	Full Weight, kg	Control Method	Figure
2с-32-1	80	10	450	25Л	Water-Steam	0,73	100	84	14	77	90	74	310	470	590	496	-	-	-	71	-	М	16
2с-30-1	80	10	450	25Л	Water-Steam	0,73	100	84	14	77	90	74	310	320	700	610	-	-	-	83	-	Ц	18
2с-31-1	80	10	450	25Л	Water-Steam	0,73	100	84	14	77	90	74	310	320	516	428	-	-	-	85	-	К	17
2с-30-1ЭГ	80	10	450	25Л	Water-Steam	0,73	100	84	14	77	90	74	310	-	938	848	ГЗ-Б.300/24	0,75	35	64	117	Э	19
2с-30-1ЭЧ	80	10	450	25Л	Water-Steam	0,73	100	84	14	77	90	74	310	-	1350	1265	ПЭМ-Б2М	0,55	34	64	104	Э	19
2с-30-1ЭК	80	10	450	25Л	Water-Steam	0,73	100	84	14	77	90	74	310	-	926	836	MODACT MON 52031.2222N	0,37	34	64	105	Э	19
2с-30-1ЭМ	80	10	450	25Л	Water-Steam	0,73	100	84	14	77	90	74	310	-	1127	1037	Н-Б1-08	1,32	37	64	117	Э	19
2с-30-1ЭД	80	10	450	25Л	Water-Steam	0,73	100	84	14	77	90	74	310	-	960	870	AUMA SA14.2-F14-380/50/3-22	0,45	38	64	108	Э	19
2с-30-1ЭН	80	10	450	25Л	Water-Steam	0,73	100	84	14	77	90	74	310	-	820	735	ЭП-3-100-24-А2-05-В	0,45	35	64	80	Э	19
2с-35-1	80	6,3	425	25Л	Water-Steam	0,73	100	84	14	81	90	74	310	470	590	496	-	-	-	71	-	М	16
2с-33-1	80	6,3	425	25Л	Water-Steam	0,73	100	84	14	81	90	74	310	320	700	610	-	-	-	83	-	Ц	18
2с-34-1	80	6,3	425	25Л	Water-Steam	0,73	100	84	14	81	90	74	310	320	516	428	-	-	-	85	-	К	17
2с-33-1ЭГ	80	6,3	425	25Л	Water-Steam	0,73	100	84	14	81	90	74	310	-	933	848	ГЗ-Б.300/24	0,75	35	64	117	Э	19
2с-33-1ЭЧ	80	6,3	425	25Л	Water-Steam	0,73	100	84	14	81	90	74	310	-	1350	1265	ПЭМ-Б2М	0,55	34	64	104	Э	19
2с-33-1ЭК	80	6,3	425	25Л	Water-Steam	0,73	100	84	14	81	90	74	310	-	926	836	MODACT MON 52031.2222N	0,37	34	64	105	Э	19
2с-33-1ЭМ	80	6,3	425	25Л	Water-Steam	0,73	100	84	14	81	90	74	310	-	1127	1037	Н-Б1-08	1,32	37	64	117	Э	19
2с-33-1ЭД	80	6,3	425	25Л	Water-Steam	0,73	100	84	14	81	90	74	310	-	960	870	AUMA SA14.2-F14-380/50/3-22	0,45	38	64	108	Э	19
2с-33-1ЭН	80	6,3	425	25Л	Water-Steam	0,73	100	84	14	81	90	74	310	-	820	735	ЭП-3-100-24-А2-05-В	0,45	35	64	80	Э	19
1511-80-М	80	10	450	15ГС	Water-Steam	0,3	70	90	18	77	90	72	300	320	714	620	-	-	-	74	-	М	16
1511-80-ЦЗ	80	10	450	15ГС	Water-Steam	0,3	70	90	18	77	90	72	300	-	754	660	-	-	-	94	-	Ц	18
1511-80-КЗ	80	10	450	15ГС	Water-Steam	0,3	70	90	18	77	90	72	300	-	724	630	-	-	-	82	-	К	17
1511-80-ЭГ	80	10	450	15ГС	Water-Steam	0,3	70	90	18	77	90	72	300	-	915	821	ГЗ-А.100/24	0,75	35	71	103	Э	19
1511-80-ЭЧ	80	10	450	15ГС	Water-Steam	0,3	70	90	18	77	90	72	300	-	1140	1046	ПЭМ-А11М	0,46	45	71	93,5	Э	19
1511-80-ЭК	80	10	450	15ГС	Water-Steam	0,3	70	90	18	77	90	72	300	-	926	936	MODACT MON 52031.2222N	0,37	34	71	105	Э	19
1511-80-ЭМ	80	10	450	15ГС	Water-Steam	0,3	70	90	18	77	90	72	300	-	1028	933	Н-А2-11К	0,25	35	71	88	Э	19
1511-80-ЭД	80	10	450	15ГС	Water-Steam	0,3	70	90	18	77	90	72	300	-	852	758	AUMA SA10.2-F10-380/50/3-22	0,45	38	71	102	Э	19
1511-80-ЭН	80	10	450	15ГС	Water-Steam	0,3	70	90	18	77	90	72	300	-	829	735	ЭП-3-100-24-А2-05-В	0,45	35	71	85	Э	19
2с-32-2	100	10	450	25Л	Water-Steam	0,26	100	84	14	93	111	74	350	470	590	496	-	-	-	78	-	М	16
2с-30-2	100	10	450	25Л	Water-Steam	0,26	100	84	14	93	111	74	350	320	700	610	-	-	-	86	-	Ц	18
2с-31-2	100	10	450	25Л	Water-Steam	0,26	100	84	14	93	111	74	350	320	516	428	-	-	-	90	-	К	17
2с-30-2ЭГ	100	10	450	25Л	Water-Steam	0,26	100	84	14	93	111	74	350	-	933	848	ГЗ-Б.300/24	0,75	35	90	143	Э	19
2с-30-2ЭЧ	100	10	450	25Л	Water-Steam	0,26	100	84	14	93	111	74	350	-	1350	1265	ПЭМ-Б2М	0,55	34	90	130	Э	19
2с-30-2ЭК	100	10	450	25Л	Water-Steam	0,26	100	84	14	93	111	74	350	-	926	836	MODACT MON 52031.2222N	0,37	34	90	131	Э	19
2с-30-2ЭМ	100	10	450	25Л	Water-Steam	0,26	100	84	14	93	111	74	350	-	1127	1037	Н-Б1-08	1,32	37	90	143	Э	19
2с-30-2ЭД	100	10	450	25Л	Water-Steam	0,26	100	84	14	93	111	74	350	-	960	870	AUMA SA14.2-F14-380/50/3-22	0,45	38	90	134	Э	19
2с-30-2ЭН	100	10	450	25Л	Water-Steam	0,26	100	84	14	93	111	74	350	-	820	735	ЭП-3-100-24-А2-05-В	0,45	35	90	106	Э	19
2с-35-2	100	6,3	425	25Л	Water-Steam	0,26	100	110	14	97	111	74	350	470	590	496	-	-	-	78	-	М	16
2с-33-2	100	6,3	425	25Л	Water-Steam	0,26	100	110	14	97	111	74	350	320	700	610	-	-	-	86	-	Ц	18
2с-34-2	100	6,3	425	25Л	Water-Steam	0,26	100	110	14	97	111	74	350	320	516	428	-	-	-	90	-	К	17
2с-33-2ЭГ	100	6,3	425	25Л	Water-Steam	0,26	100	110	14	97	111	74	350	-	933	848	ГЗ-Б.300/24	0,75	35	90	143	Э	19
2с-33-2ЭЧ	100	6,3	425	25Л	Water-Steam	0,26	100	110	14	97	111	74	350	-	1350	1265	ПЭМ-Б2М	0,55	34	90	130	Э	19
2с-33-2ЭК	100	6,3	425	25Л	Water-Steam	0,26	100	110	14	97	111	74	350	-	926	836	MODACT MON 52031.2222N	0,37	34	90	131	Э	19
2с-33-2ЭМ	100	6,3	425	25Л	Water-Steam	0,26	100	110	14	97	111	74	350	-	1127	1037	Н-Б1-08	1,32	37	90	143	Э	19
2с-33-2ЭД	100	6,3	425	25Л	Water-Steam	0,26	100	110	14	97	111	74	350	-	960	870	AUMA SA14.2-F14-380/50/3-22	0,45	38	90	134	Э	19
2с-33-2ЭН	100	6,3	425	25Л	Water-Steam	0,26	100	110	14	97	111	74	350	-	820	735	ЭП-3-100-24-А2-05-В	0,45	35	90	106	Э	19
1123-100-М-01	100	9,8*	540	15Х1М1Ф	Steam	0,6	190	110	18	112	146	85	400	470	990	830	-	-	-	195	-	М	25
1123-100-ЦЗ-01	100	9,8*	540	15Х1М1Ф	Steam	0,6	190	110	18	112	146	85	400	320	990	855	-	-	-	212	-	Ц	26
1123-100-КЗ-01	100	9,8*	540	15Х1М1Ф	Steam	0,6	190	110	18	112	146	85	400	320	990	855	-	-	-	213	-	К	27

** - Pressure, P. ** - The drag coefficient is determined relative to the saddle section*

Gate Valves

Identification	DN, mm	PN, MPa	Tmax of the Medium, °C	Body Material, Steel	Working Medium	ζ**, not more than	Мкр., N•m, not more than	Operating Stroke, mm	Full Stroke Rotation Number	D, mm	D1, mm	D saddle, mm	L, mm	d, mm	H, mm	h, mm	Electric Actuator Identification	N, kW	t of the Stroke, sec.	Weight without Electric Actuator, kg	Full Weight, kg	Control Method	Figure
1123-100-Э-01	100	9,8*	540	15Х1М1Ф	Steam	0,6	190	110	18	112	146	85	400	-	1080	945	792-Э-0а	1,32	54	188	259	Э	28
1123-100-ЭГ-01	100	9,8*	540	15Х1М1Ф	Steam	0,6	190	110	18	112	146	85	400	-	1221	1086	ГЗ-Б.300/24	0,75	45	188	241	Э	28
1123-100-ЭЧ-01	100	9,8*	540	15Х1М1Ф	Steam	0,6	190	110	18	112	146	85	400	-	1800	1652	ПЭМ-Б2М	0,55	43	188	228	Э	28
1123-100-ЭК-01	100	9,8*	540	15Х1М1Ф	Steam	0,6	190	110	18	112	146	85	400	-	1186	1038	MODACT MON 52032.12J2N	1,1	43	188	236	Э	28
1123-100-ЭМ-01	100	9,8*	540	15Х1М1Ф	Steam	0,6	190	110	18	112	146	88	400	-	1243	1108	Н-Б1-08	1,32	46	188	241	Э	28
1123-100-ЭД-01	100	9,8*	540	15Х1М1Ф	Steam	0,6	190	110	18	112	146	85	400	-	1173	1025	AUMA SA14.6-F14-380/50/3-22	0,8	49	188	234	Э	28
1123-100-ЭН-01	100	9,8*	540	15Х1М1Ф	Steam	0,6	190	110	18	112	146	85	400	-	1195	1047	ЭП-3-300-25-Б1-0-А	0,75	43	188	226	Э	28
1123-100-М	100	13,7*	560	15Х1М1Ф	Steam	0,4	270	110	18	94	146	85	400	470	990	830	-	-	-	196	-	М	25
1123-100-ЦЗ	100	13,7*	560	15Х1М1Ф	Steam	0,4	270	110	18	94	146	85	400	320	990	855	-	-	-	213	-	Ц	26
1123-100-КЗ	100	13,7*	560	15Х1М1Ф	Steam	0,4	270	110	18	94	146	85	400	320	990	855	-	-	-	214	-	К	27
1123-100-Э	100	13,7*	560	15Х1М1Ф	Steam	0,4	270	110	18	94	146	85	400	-	1080	945	792-Э-0а	1,32	54	189	260	Э	28
1123-100-ЭГ	100	13,7*	560	15Х1М1Ф	Steam	0,4	270	110	18	94	146	85	400	-	1221	1086	ГЗ-Б.300/24	0,75	45	189	242	Э	28
1123-100-ЭЧ	100	13,7*	560	15Х1М1Ф	Steam	0,4	270	110	18	94	146	85	400	-	1800	1652	ПЭМ-Б2М	0,55	43	189	229	Э	28
1123-100-ЭК	100	13,7*	560	15Х1М1Ф	Steam	0,4	270	110	18	94	146	85	400	-	1186	1038	MODACT MON 52032.12J2N	1,1	43	189	237	Э	28
1123-100-ЭМ	100	13,7*	560	15Х1М1Ф	Steam	0,4	270	110	18	94	146	85	400	-	1243	1108	Н-Б1-08	1,32	46	189	242	Э	28
1123-100-ЭД	100	13,7*	560	15Х1М1Ф	Steam	0,4	270	110	18	94	146	85	400	-	1173	1025	AUMA SA14.6-F14-380/50/3-22	0,8	49	189	235	Э	28
1123-100-ЭН	100	13,7*	560	15Х1М1Ф	Steam	0,4	270	110	18	94	146	85	400	-	1195	1047	ЭП-3-300-25-Б1-0-А	0,75	43	189	227	Э	28
881-100-ЦЗ	100	25*	545	15Х1М1Ф	Steam	0,2	950	160	20	97	172	100	500	-	1194	1026	-	-	-	415	-	Ц	26
881-100-КЗ	100	25*	545	15Х1М1Ф	Steam	0,2	950	160	20	97	172	100	500	-	1205	1037	-	-	-	415	-	К	27
881-100-Э	100	25*	545	15Х1М1Ф	Steam	0,2	950	160	20	97	172	100	500	-	1331	1164	793-Э-0	3,2	55	360	468	Э	28
881-100-ЭГ	100	25*	545	15Х1М1Ф	Steam	0,2	950	160	20	97	172	100	500	-	1257	1090	ГЗ-Г.2500/24	5,5	50	360	555	Э	28
881-100-ЭЧ	100	25*	545	15Х1М1Ф	Steam	0,2	950	160	20	97	172	100	500	-	1155	988	ПЭМ-В34-1000-25-36М	3,1	48	360	447	Э	28
881-100-ЭК	100	25*	545	15Х1М1Ф	Steam	0,2	950	160	20	97	172	100	500	-	1143	976	MODACT MON 52034.3272N	3,0	35	360	460	Э	28
881-100-ЭМ	100	25*	545	15Х1М1Ф	Steam	0,2	950	160	20	97	172	100	500	-	1511	1333	Н-В-21	3,2	50	360	455	Э	28
881-100-ЭД	100	25*	545	15Х1М1Ф	Steam	0,2	950	160	20	97	172	100	500	-	1141	974	AUMA SA16.2-F16-380/50/3-22	1,5	55	360	427	Э	28
881-100-ЭН	100	25*	545	15Х1М1Ф	Steam	0,2	950	160	20	97	172	100	500	-	1567	1400	ГИЮМ.303344.001-21	3,2	60	360	460	Э	28
1120-100-М-01	100	23,5*	250	20	Water	0,6	290	110	18	109	146	85	400	470	990	830	-	-	-	195	-	М	25
1120-100-ЦЗ-01	100	23,5*	250	20	Water	0,6	290	110	18	109	146	85	400	320	990	855	-	-	-	212	-	Ц	26
1120-100-КЗ-01	100	23,5*	250	20	Water	0,6	290	110	18	109	146	85	400	320	990	855	-	-	-	213	-	К	27
1120-100-Э-01	100	23,5*	250	20	Water	0,6	290	110	18	109	146	85	400	-	995	860	792-Э-0а	1,32	55	188	246	Э	28
1120-100-ЭГ-01	100	23,5*	250	20	Water	0,6	290	110	18	109	146	85	400	-	1221	1086	ГЗ-Б.300/24	0,75	45	188	241	Э	28
1120-100-ЭЧ-01	100	23,5*	250	20	Water	0,6	290	110	18	109	146	85	400	-	1800	1652	ПЭМ-Б2М	0,55	43	188	228	Э	28
1120-100-ЭК-01	100	23,5*	250	20	Water	0,6	290	110	18	109	146	85	400	-	1155	1020	MODACT MON 52032.12J2N	1,1	43	188	242	Э	28
1120-100-ЭМ-01	100	23,5*	250	20	Water	0,6	290	110	18	109	146	85	400	-	1243	1108	Н-Б1-08	1,32	46	188	241	Э	28
1120-100-ЭД-01	100	23,5*	250	20	Water	0,6	290	110	18	109	146	85	400	-	1173	1025	AUMA SA14.6-F14-380/50/3-22	0,8	49	188	234	Э	28
1120-100-ЭН-01	100	23,5*	250	20	Water	0,6	290	110	18	109	146	85	400	-	1141	1006	ЭП-3-300-25-Б1-0-А	0,75	44	188	226	Э	28
1120-100-М	100	37,3*	280	20	Water	0,4	470	110	18	98	146	85	400	470	990	830	-	-	-	196	-	М	25
1120-100-ЦЗ	100	37,3*	280	20	Water	0,4	470	110	18	98	146	85	400	320	990	855	-	-	-	216	-	Ц	26
1120-100-КЗ	100	37,3*	280	20	Water	0,4	470	110	18	98	146	85	400	320	990	855	-	-	-	217	-	К	27
1120-100-Э	100	37,3*	280	20	Water	0,4	470	110	18	98	146	85	400	-	1010	875	792-Э-0а	1,32	55	191	262	Э	28
1120-100-ЭГ	100	37,3*	280	20	Water	0,4	470	110	18	98	146	85	400	-	1105	970	ГЗ-В.900/24	2,2	90	191	311	Э	28
1120-100-ЭЧ	100	37,3*	280	20	Water	0,4	470	110	18	98	146	85	400	-	1438	1290	ПЭМ-В2-630-25-36М	3,1	43	191	278	Э	28
1120-100-ЭК	100	37,3*	280	20	Water	0,4	470	110	18	98	146	85	400	-	1241	1093	MODACT MON 52034.3222N	2,2	31	191	288	Э	28
1120-100-ЭМ	100	37,3*	280	20	Water	0,4	470	110	18	98	146	85	400	-	1290	1155	Н-В-08	3,2	46	191	303	Э	28
1120-100-ЭД	100	37,3*	280	20	Water	0,4	470	110	18	98	146	85	400	-	1189	1041	AUMA SA16.2-F16-380/50/3-22	1,5	49	191	258	Э	28
1120-100-ЭН	100	37,3*	280	20	Water	0,4	470	110	18	98	146	85	400	-	1311	1163	ЭП-3-630-24-В-0-А	1,85	45	191	266	Э	28
1511-100-МБ	100	10	450	15ГС	Water-Steam	0,8	70	90	18	93	114	72	300	-	714	620	-	-	-	74	-	М	16
1511-100-ЦЗА	100	10	450	15ГС	Water-Steam	0,8	70	90	18	93	114	72	300	-	754	660	-	-	-	94	-	Ц	18

** - Pressure, P. ** - The drag coefficient is determined relative to the saddle section*

Identification	DN, mm	PN, MPa	Tmax of the Medium, °C	Body Material, Steel	Working Medium	ζ**, not more than	Мкр., N•m, not more than	Operating Stroke, mm	Full Stroke Rotation Number	D, mm	D1, mm	D saddle, mm	L, mm	d, mm	H, mm	h, mm	Electric Actuator Identification	N, kW	t of the Stroke, sec.	Weight without Electric Actuator, kg	Full Weight, kg	Control Method	Figure
1511-100-КЗБ	100	10	450	15ГС	Water-Steam	0,8	70	90	18	93	114	72	300	-	724	630	-	-	-	82	-	К	17
1511-100-ЭГ	100	10	450	15ГС	Water-Steam	0,8	70	90	18	93	114	72	300	-	915	821	ГЗ-А.100/24	0,25	45	71	103	Э	19
1511-100-ЭЧ	100	10	450	15ГС	Water-Steam	0,8	70	90	18	93	114	72	300	-	1140	1046	ПЭМ-А11М	0,46	45	71	93,5	Э	19
1511-100-ЭМ	100	10	450	15ГС	Water-Steam	0,8	70	90	18	93	114	72	300	-	1094	1000	Н-А2-11К	0,25	45	71	88	Э	19
1511-100-ЭД	100	10	450	15ГС	Water-Steam	0,8	70	90	18	93	114	72	300	-	852	758	AUMA SA10.2-F10-380/50/3-22	0,25	49	71	102	Э	19
1511-100-ЭН	100	10	450	15ГС	Water-Steam	0,8	70	90	18	93	114	72	300	-	829	735	ЭП-3-100-24-А2-05-В	0,45	45	71	85	Э	19
1156-125-М	125	9,8*	540	15Х1М1Ф	Steam	0,6	230	110	18	134	165	100	460	470	990	830	-	-	-	196	-	М	25
1156-125-ЦЗ	125	9,8*	540	15Х1М1Ф	Steam	0,6	230	110	18	134	165	100	460	320	995	855	-	-	-	220	-	Ц	26
1156-125-КЗ	125	9,8*	540	15Х1М1Ф	Steam	0,6	230	110	18	134	165	100	460	320	812	672	-	-	-	218	-	К	27
1156-125-Э	125	9,8*	540	15Х1М1Ф	Steam	0,6	230	110	18	134	165	100	460	-	1000	860	792-Э-0а	1,32	54	194	265	Э	28
1156-125-ЭГ	125	9,8*	540	15Х1М1Ф	Steam	0,6	230	110	18	134	165	100	460	-	1192	1052	ГЗ-Б.300/24	0,75	45	194	247	Э	28
1156-125-ЭЧ	125	9,8*	540	15Х1М1Ф	Steam	0,6	230	110	18	134	165	100	460	-	1605	1465	ПЭМ-Б2М	0,55	43	194	234	Э	28
1156-125-ЭК	125	9,8*	540	15Х1М1Ф	Steam	0,6	230	110	18	134	165	100	460	-	1126	986	MODACT MON 52032.1222N	0,75	44	194	239	Э	28
1156-125-ЭМ	125	9,8*	540	15Х1М1Ф	Steam	0,6	230	110	18	134	165	100	460	-	1248	1108	Н-Б1-08	1,32	46	194	247	Э	28
1156-125-ЭД	125	9,8*	540	15Х1М1Ф	Steam	0,6	230	110	18	134	165	100	460	-	1130	990	AUMA SA14.6-F14-380/50/3-22	0,8	49	194	240	Э	28
1156-125-ЭН	125	9,8*	540	15Х1М1Ф	Steam	0,6	230	110	18	134	165	100	460	-	1105	965	ЭП-3-300-25-Б1-0-А	0,75	45	194	232	Э	28
2с-25-1Н	150	6,3	425	25Л	Water-Steam	0,45	250	140	23	147	160	130	450	470	830	680	-	-	-	148	-	М	20
2с-26-1	150	6,3	425	25Л	Water-Steam	0,45	250	140	23	147	160	130	450	320	945	795	-	-	-	165	-	Ц	21
2с-27-1	150	6,3	425	25Л	Water-Steam	0,45	250	140	23	147	160	130	450	320	760	610	-	-	-	165	-	К	22
2с-25-1	150	10	450	25Л	Water-Steam	0,45	250	140	23	142	160	130	450	470	830	680	-	-	-	148	-	М	20
2с-28-1	150	10	450	25Л	Water-Steam	0,45	250	140	23	142	160	130	450	320	945	795	-	-	-	165	-	Ц	21
2с-29-1	150	10	450	25Л	Water-Steam	0,45	250	140	23	142	160	130	450	320	760	610	-	-	-	165	-	К	22
2с-ЭГ-1	150	10	450	25Л	Water-Steam	0,45	250	140	23	142	160	130	450	-	1232	1082	ГЗ-Б.300/24	0,75	55	145	198	Э	23
2с-ЭЧ-1	150	10	450	25Л	Water-Steam	0,45	250	140	23	142	160	130	450	-	1600	1450	ПЭМ-Б2М	0,55	55	145	185	Э	23
2с-ЭК-1	150	10	450	25Л	Water-Steam	0,45	250	140	23	142	160	130	450	-	1125	975	MODACT MON 52032.12J2N	1,1	55	145	193	Э	23
2с-ЭМ-1	150	10	450	25Л	Water-Steam	0,45	250	140	23	142	160	130	450	-	1366	1217	Н-Б1-08	1,32	60	145	198	Э	23
2с-ЭД-1	150	10	450	25Л	Water-Steam	0,45	250	140	23	142	160	130	450	-	1205	1055	AUMA SA14.6-F14-380/50/3-22	0,8	63	145	191	Э	23
2с-ЭН-1	150	10	450	25Л	Water-Steam	0,45	250	140	23	142	160	130	450	-	1092	943	ЭП-3-300-25-Б1-0-А	-	55	145	183	Э	23
2с-27-1ЭГ	150	6,3	425	25Л	Water-Steam	0,45	250	140	23	147	160	130	450	-	1232	1082	ГЗ-Б.300/24	0,75	55	145	198	Э	23
2с-27-1ЭЧ	150	6,3	425	25Л	Water-Steam	0,45	250	140	23	147	160	130	450	-	1600	1450	ПЭМ-Б2М	0,55	55	145	185	Э	23
2с-27-1ЭК	150	6,3	425	25Л	Water-Steam	0,45	250	140	23	147	160	130	450	-	1125	975	MODACT MON 52032.12J2N	1,1	55	145	193	Э	23
2с-27-1ЭМ	150	6,3	425	25Л	Water-Steam	0,45	250	140	23	147	160	130	450	-	1366	1217	Н-Б1-08	1,32	60	145	198	Э	23
2с-27-1ЭД	150	6,3	425	25Л	Water-Steam	0,45	250	140	23	147	160	130	450	-	1205	1055	AUMA SA14.6-F14-380/50/3-22	0,8	63	145	191	Э	23
2с-27-1ЭН	150	6,3	425	25Л	Water-Steam	0,45	250	140	23	147	160	130	450	-	1092	943	ЭП-3-300-25-Б1-0-А	-	55	145	183	Э	23
1015-150-ЦЗ	150	9,8*	540	15Х1М1Ф	Steam	0,5	380	160	20	163	194	100	500	-	1208	1026	-	-	-	363	-	Ц	21
1015-150-КЗ	150	9,8*	540	15Х1М1Ф	Steam	0,5	380	160	20	163	194	100	500	-	973	791	-	0,75	-	355	-	К	22
1015-150-Э	150	9,8*	540	15Х1М1Ф	Steam	0,5	380	160	20	163	194	100	500	-	1212	1030	793-Э-0-II	1,3	57	295	393	Э	29
1015-150-ЭГ	150	9,8*	540	15Х1М1Ф	Steam	0,5	380	160	20	163	194	100	500	-	1336	1154	ГЗ-В.600/24	1,5	50	307	422	Э	29
1015-150-ЭЧ	150	9,8*	540	15Х1М1Ф	Steam	0,5	380	160	20	163	194	100	500	-	1623	1443	ПЭМ-В2-630-25-36М	3,1	48	307	394	Э	29
1015-150-ЭК	150	9,8*	540	15Х1М1Ф	Steam	0,5	380	160	20	163	194	100	500	-	1312	1130	MODACT MON 52033.3212N	2,2	48	307	397	Э	29
1015-150-ЭМ	150	9,8*	540	15Х1М1Ф	Steam	0,5	380	160	20	163	194	100	500	-	1515	1333	Н-В-08	3,2	50	307	401	Э	29
1015-150-ЭД	150	9,8*	540	15Х1М1Ф	Steam	0,5	380	160	20	163	194	100	500	-	1305	1123	AUMA SA14.6-F14-380/50/3-22	0,8	55	307	353	Э	29
1015-150-ЭН	150	9,8*	540	15Х1М1Ф	Steam	0,5	380	160	20	163	194	100	500	-	1503	1318	ЭП-3-630-24-В-0-А	1,85	50	307	382	Э	29
881-150-ЦЗ	150	25*	545	15Х1М1Ф	Steam	0,6	1600	180	22,5	151	262	125	630	-	1458	1240	-	-	-	868	-	Ц	26
881-150-КЗ	150	25*	545	15Х1М1Ф	Steam	0,6	1600	180	22,5	151	262	125	630	-	1312	1094	-	-	-	868	-	К	27
881-150-Э	150	25*	545	15Х1М1Ф	Steam	0,6	1600	180	22,5	151	262	125	630	-	1485	1260	795-Э-0	4,25	63	868	1105	Э	29
881-150-ЭГ	150	25*	545	15Х1М1Ф	Steam	0,6	1600	180	22,5	151	262	125	630	-	1795	1570	ГЗ-Г.2500/24	5,5	56	915	1110	Э	29
881-150-ЭМ	150	25*	545	15Х1М1Ф	Steam	0,6	1600	180	22,5	151	262	125	630	-	1850	1625	Н-Г-11	4,25	72	915	1080	Э	29

** - Pressure, P. ** - The drag coefficient is determined relative to the saddle section*

Gate Valves

Identification	DN, mm	PN, MPa	Tmax of the Medium, °C	Body Material, Steel	Working Medium	ζ**, not more than	Мкр., N•m, not more than	Operating Stroke, mm	Full Stroke Rotation Number	D, mm	D1, mm	D saddle, mm	L, mm	d, mm	H, mm	h, mm	Electric Actuator Identification	N, kW	t of the Stroke, sec.	Weight without Electric Actuator, kg	Full Weight, kg	Control Method	Figure
881-150-ЭД	150	25*	545	15Х1М1Ф	Steam	0,6	1600	180	22,5	151	262	125	630	-	1721	1496	SA14.6/GK25.2-F25-380/50/3-22	0,8	55	915	1061	Э	29
881-150-ЭН	150	25*	545	15Х1М1Ф	Steam	0,6	1600	180	22,5	151	262	125	630	-	1770	1545	ГИЮМ.303344.001-06	3,2	68	915	1010	Э	29
1012-150-ЦЗ	150	23,5*	250	15ГС	Water	0,5	700	160	20	161	194	100	500	-	1115	933	-	-	-	325	-	Ц	26
1012-150-КЗ	150	23,5*	250	15ГС	Water	0,5	700	160	20	161	194	100	500	-	988	806	-	-	-	333	-	К	27
1012-150-Э	150	23,5*	250	15ГС	Water	0,5	700	160	20	161	194	100	500	-	1198	1030	793-Э-0	3,2	55	307	415	Э	29
1012-150-ЭГ	150	23,5*	250	15ГС	Water	0,5	700	160	20	161	194	100	500	-	1252	1080	ГЗ-В.900/24	2,2	50	307	427	Э	29
1012-150-ЭЧ	150	23,5*	250	15ГС	Water	0,5	700	160	20	161	194	100	500	-	1627	1445	ПЭМ-В34-1000-25-36М	3,1	48	307	394	Э	29
1012-150-ЭК	150	23,5*	250	15ГС	Water	0,5	700	160	20	161	194	100	500	-	1428	1246	MODACT MON 52034.3272N	3,0	35	307	407	Э	29
1012-150-ЭМ	150	23,5*	250	15ГС	Water	0,5	700	160	20	161	194	100	500	-	1515	1333	Н-В-21	3,2	50	307	401	Э	29
1012-150-ЭД	150	23,5*	250	15ГС	Water	0,5	700	160	20	161	194	100	500	-	1370	1188	AUMA SA16.2-F16-380/50/3-22	1,5	55	307	374	Э	29
1012-150-ЭН	150	23,5*	250	15ГС	Water	0,5	700	160	20	161	194	100	500	-	1580	1398	ЭП-3-1000-24-В-0-А	2,5	50	307	387	Э	29
880-150-ЦЗ	150	37,3*	280	15ГС	Water	1,5	950	160	20	144	200	100	500	-	1208	1026	-	-	-	450	-	Ц	26
880-150-КЗ	150	37,3*	280	15ГС	Water	1,5	950	160	20	144	200	100	500	-	973	791	-	-	-	442	-	К	27
880-150-Э	150	37,3*	280	15ГС	Water	1,5	950	160	20	144	200	100	500	-	1195	1027	793-Э-0	3,2	55	391	499	Э	29
880-150-ЭГ	150	37,3*	280	15ГС	Water	1,5	950	160	20	144	200	100	500	-	1262	1090	ГЗ-Г.2500/24	5,5	50	391	586	Э	29
880-150-ЭЧ	150	37,3*	280	15ГС	Water	1,5	950	160	20	144	200	100	500	-	1611	1443	ПЭМ-В34-1000-25-36М	3,1	48	391	478	Э	29
880-150-ЭК	150	37,3*	280	15ГС	Water	1,5	950	160	20	144	200	100	500	-	1428	1260	MODACT MON 52034.3272N	3,0	35	391	491	Э	29
880-150-ЭМ	150	37,3*	280	15ГС	Water	1,5	950	160	20	144	200	100	500	-	1511	1333	Н-В-21	3,2	50	391	485	Э	29
880-150-ЭД	150	37,3*	280	15ГС	Water	1,5	950	160	20	144	200	100	500	-	1374	1206	AUMA SA16.2-F16-380/50/3-22	1,5	55	391	458	Э	29
880-150-ЭН	150	37,3*	280	15ГС	Water	1,5	950	160	20	144	200	100	500	-	1566	1398	ЭП-3-1000-24-В-0-А	2,5	50	391	471	Э	29
1156-150-М	150	4,0*	545	15Х1М1Ф	Steam	1,0	230	110	18	144	165	100	460	470	990	830	-	-	-	196	-	М	25
1156-150-ЦЗ	150	4,0*	545	15Х1М1Ф	Steam	1,0	230	110	18	144	165	100	460	320	995	855	-	-	-	220	-	Ц	26
1156-150-КЗ	150	4,0*	545	15Х1М1Ф	Steam	1,0	230	110	18	144	165	100	460	320	812	672	-	-	-	218	-	К	27
1156-150-Э	150	4,0*	545	15Х1М1Ф	Steam	1,0	230	110	18	144	165	100	460	-	1000	860	792-Э-0а	1,32	54	194	265	Э	28
1156-150-ЭГ	150	4,0*	545	15Х1М1Ф	Steam	1,0	230	110	18	144	165	100	460	-	1192	1052	ГЗ-Б.300/24	0,75	45	194	247	Э	28
1156-150-ЭЧ	150	4,0*	545	15Х1М1Ф	Steam	1,0	230	110	18	144	165	100	460	-	1605	1465	ПЭМ-Б2М	0,55	43	194	234	Э	28
1156-150-ЭК	150	4,0*	545	15Х1М1Ф	Steam	1,0	230	110	18	144	165	100	460	-	1126	986	MODACT MON 52032.1222N	0,75	44	194	239	Э	28
1156-150-ЭМ	150	4,0*	545	15Х1М1Ф	Steam	1,0	230	110	18	144	165	100	460	-	1205	1065	Н-Б1-08	1,32	44	194	247	Э	28
1156-150-ЭД	150	4,0*	545	15Х1М1Ф	Steam	1,0	230	110	18	144	165	100	460	-	1130	990	AUMA SA14.6-F14-380/50/3-22	0,8	49	194	240	Э	28
1156-150-ЭН	150	4,0*	545	15Х1М1Ф	Steam	1,0	230	110	18	144	165	100	460	-	1105	965	ЭП-3-300-25-Б1-0-А	0,75	45	194	232	Э	28
1126-150-МБ	150	10	450	20	Water-Steam	1,3	150	110	18	142	170	100	460	470	990	830	-	-	-	196	-	М	25
1126-150-ЦЗБ	150	10	450	20	Water-Steam	1,3	150	110	18	142	170	100	460	320	995	855	-	-	-	220	-	Ц	26
1126-150-КЗБ	150	10	450	20	Water-Steam	1,3	150	110	18	142	170	100	460	320	812	672	-	-	-	218	-	К	27
1126-150-Э	150	10	450	20	Water-Steam	1,3	150	110	18	142	170	100	460	-	1000	860	792-Э-0а	1,32	54	194	265	Э	28
1126-150-ЭГ	150	10	450	20	Water-Steam	1,3	150	110	18	142	170	100	460	-	1192	1052	ГЗ-Б.300/24	0,75	45	194	247	Э	28
1126-150-ЭЧ	150	10	450	20	Water-Steam	1,3	150	110	18	142	170	100	460	-	1605	1465	ПЭМ-Б2М	0,55	43	194	234	Э	28
1126-150-ЭК	150	10	450	20	Water-Steam	1,3	150	110	18	142	170	100	460	-	1126	986	MODACT MON 52032.1222N	0,75	44	194	239	Э	28
1126-150-ЭМ	150	10	450	20	Water-Steam	1,3	150	110	18	142	170	100	460	-	1145	1005	Н-Б1-08	1,32	46	194	264	Э	28
1126-150-ЭД	150	10	450	20	Water-Steam	1,3	150	110	18	142	170	100	460	-	1130	990	AUMA SA14.6-F14-380/50/3-22	0,8	49	194	240	Э	28
1126-150-ЭН	150	10	450	20	Water-Steam	1,3	150	110	18	142	170	100	460	-	1105	965	ЭП-3-300-25-Б1-0-А	0,75	45	194	232	Э	28
1511-150-МБ	150	10	450	15ГС	Water-Steam	0,9	100	112	22,4	142	165	96	400	-	810	705	-	-	-	105	-	М	16
1511-150-ЦЗБ	150	10	450	15ГС	Water-Steam	0,9	100	112	22,4	142	165	96	400	-	820	715	-	-	-	126	-	Ц	18
1511-150-КЗБ	150	10	450	15ГС	Water-Steam	0,9	100	112	22,4	142	165	96	400	-	800	695	-	-	-	115	-	К	17
1511-150-ЭГ	150	10	450	15ГС	Water-Steam	0,9	100	112	22,4	142	165	96	400	-	1011	906	ГЗ-Б.300/24	0,75	56	97	150	Э	19
1511-150-ЭЧ	150	10	450	15ГС	Water-Steam	0,9	100	112	22,4	142	165	96	400	-	1595	1490	ПЭМ-Б2М	0,55	56	97	137	Э	19
1511-150-ЭМБ	150	10	450	15ГС	Water-Steam	0,9	100	112	22,4	142	165	96	400	-	1085	970	Н-Б1-02	1,32	56	97	150	Э	19
1511-150-ЭД	150	10	450	15ГС	Water-Steam	0,9	100	112	22,4	142	165	96	400	-	1018	913	AUMA SA14.6-F14-380/50/3-22	0,8	61	97	143	Э	19
1511-150-ЭН	150	10	450	15ГС	Water-Steam	0,9	100	112	22,4	142	165	96	400	-	895	790	ЭП-3-100-24-А2-05-В	0,45	56	97	111	Э	19

** - Pressure, P. ** - The drag coefficient is determined relative to the saddle section*

Identification	DN, mm	PN, MPa	Tmax of the Medium, °C	Body Material, Steel	Working Medium	ζ**, not more than	Мкр., N•m, not more than	Operating Stroke, mm	Full Stroke Rotation Number	D, mm	D1, mm	D saddle, mm	L, mm	d, mm	H, mm	h, mm	Electric Actuator Identification	N, kW	t of the Stroke, sec.	Weight without Electric Actuator, kg	Full Weight, kg	Control Method	Figure
1013-175-Ц3-01	175	9,8*	540	15Х1М1Ф	Steam	0,4	850	190	24	184	219	150	650	-	1472	1236		-	-	761	-	Ц	26
1013-175-К3-01	175	9,8*	540	15Х1М1Ф	Steam	0,4	850	190	24	184	219	150	650	-	1240	1004	-	-	-	731	-	К	27
1013-175-Э-01	175	9,8*	540	15Х1М1Ф	Steam	0,4	850	190	24	184	219	150	650	-	1494	1264	795-Э-0-V	4,25	65	673	907	Э	29
1013-175-ЭГ-01	175	9,8*	540	15Х1М1Ф	Steam	0,4	850	190	24	184	219	150	650	-	1500	1270	ГЗ-Г.2500/24	5,5	60	703	898	Э	29
1013-175-ЭК-01	175	9,8*	540	15Х1М1Ф	Steam	0,4	850	190	24	184	219	150	650	-	1952	1724	MODACT MON 52036.4202N	5,5	71	703	1000	Э	29
1013-175-ЭМ-01	175	9,8*	540	15Х1М1Ф	Steam	0,4	850	190	24	184	219	150	650	-	1935	1690	Н-Г-11	4,25	72	703	868	Э	29
1013-175-ЭД-01	175	9,8*	540	15Х1М1Ф	Steam	0,4	850	190	24	184	219	150	650	-	1629	1398	SA14.6/GK25.2-F25-380/50/3-22	3,3	45	703	839	Э	29
1013-175-ЭН-01	175	9,8*	540	15Х1М1Ф	Steam	0,4	850	190	24	184	219	150	650	-	1790	1545	ГИЮМ.303344.001-06	3,2	72	703	798	Э	29
1013-175-Ц3	175	13,7*	560	15Х1М1Ф	Steam	0,3	1150	190	24	156	219	150	650	-	1472	1236	-	-	-	769	-	Ц	26
1013-175-К3	175	13,7*	560	15Х1М1Ф	Steam	0,3	1150	190	24	156	219	150	650	-	1240	1004	-	-	-	739	-	К	27
1013-175-Э	175	13,7*	560	15Х1М1Ф	Steam	0,3	1150	190	24	156	219	150	650	-	1494	1264	795-Э-0-II	6	34	683	936	Э	29
1013-175-ЭГ	175	13,7*	560	15Х1М1Ф	Steam	0,3	1150	190	24	156	219	150	650	-	1500	1270	ГЗ-Г.2500/24	5,5	60	708	903	Э	29
1013-175-ЭК	175	13,7*	560	15Х1М1Ф	Steam	0,3	1150	190	24	156	219	150	650	-	1952	1724	MODACT MON 52036.4202N	5,5	71	708	1010	Э	29
1013-175-ЭМ	175	13,7*	560	15Х1М1Ф	Steam	0,3	1150	190	24	156	219	150	650	-	1935	1690	Н-Г-11	4,25	72	708	873	Э	29
1013-175-ЭД	175	13,7*	560	15Х1М1Ф	Steam	0,3	1150	190	24	156	219	150	650	-	1629	1398	SA14.6/GK25.2-F25-380/50/3-22	3,3	45	708	842	Э	29
1013-175-ЭН	175	13,7*	560	15Х1М1Ф	Steam	0,3	1150	190	24	156	219	150	650	-	1790	1545	ГИЮМ.303344.001-06	3,2	72	708	803	Э	29
1013-175-ЭЧ	175	13,7*	560	15Х1М1Ф	Steam	0,3	1150	190	24	156	219	150	650	-	1667	1436	ПЭМ-В64-1500-25-36М	3	58	708	817	Э	29
1012-175-Ц3	175	23,5*	250	15ГС	Water	0,4	1150	190	24	182	219	150	650	-	1486	1250	-	-	-	769	-	Ц	26
1012-175-К3	175	23,5*	250	15ГС	Water	0,4	1150	190	24	182	219	150	650	-	1245	1009	-	-	-	739	-	К	27
1012-175-Э	175	23,5*	250	15ГС	Water	0,4	1150	190	24	182	219	150	650	-	1494	1264	795-Э-0-V	4,25	65	668	902	Э	29
1012-175-ЭГ	175	23,5*	250	15ГС	Water	0,4	1150	190	24	182	219	150	650	-	1500	1270	ГЗ-Г.2500/24	5,5	60	708	903	Э	29
1012-175-ЭК	175	23,5*	250	15ГС	Water	0,4	1150	190	24	182	219	150	650	-	1952	1724	MODACT MON 52036.4202N	5,5	71	708	1000	Э	29
1012-175-ЭМ	175	23,5*	250	15ГС	Water	0,4	1150	190	24	182	219	150	650	-	1935	1690	Н-Г-11	4,25	72	708	873	Э	29
1012-175-ЭД	175	23,5*	250	15ГС	Water	0,4	1150	190	24	182	219	150	650	-	1629	1398	SA14.6/GK25.2-F25-380/50/3-22	3,3	45	708	842	Э	29
1012-175-ЭН	175	23,5*	250	15ГС	Water	0,4	1150	190	24	182	219	150	650	-	1790	1545	ГИЮМ.303344.001-06	3,2	72	708	803	Э	29
2с-25-2Н	200	6,3	425	25Л	Water-Steam	0,18	250	140	23	203	220	130	550	470	830	680	-	-	-	170	-	М	20
2с-26-2Н	200	6,3	425	25Л	Water-Steam	0,18	250	140	23	203	220	130	550	320	945	795	-	-	-	183	-	Ц	21
2с-27-2Н	200	6,3	425	25Л	Water-Steam	0,18	250	140	23	203	220	130	550	320	760	610	-	-	-	186	-	К	22
2с-28-2Н	200	10	450	25Л	Water-Steam	0,18	250	140	23	195	220	130	550	320	945	795	-	-	-	183	-	Ц	21
2с-29-2Н	200	10	450	25Л	Water-Steam	0,18	250	140	23	195	220	130	550	320	760	610	-	-	-	186	-	К	22
2с-ЭГ-2	200	10	450	25Л	Water-Steam	0,18	250	140	23	195	220	130	550	-	1346	1166	ГЗ-Б.300/24	0,75	58	165	218	Э	23
2с-ЭЧ-2	200	10	450	25Л	Water-Steam	0,18	250	140	23	195	220	130	550	-	1600	1450	ПЭМ-Б2М	0,55	55	165	205	Э	23
2с-ЭК-2	200	10	450	25Л	Water-Steam	0,18	250	140	23	195	220	130	550	-	1125	975	MODACT MON 52032.12J2N	1,1	55	165	213	Э	23
2с-ЭМ-2	200	10	450	25Л	Water-Steam	0,18	250	140	23	195	220	130	550	-	1366	1217	Н-Б1-08	1,32	60	165	218	Э	23
2с-ЭД-2	200	10	450	25Л	Water-Steam	0,18	250	140	23	195	220	130	550	-	1205	1055	AUMA SA14.6-F14-380/50/3-22	0,8	63	165	211	Э	23
2с-ЭН-2	200	10	450	25Л	Water-Steam	0,18	250	140	23	195	220	130	550	-	1092	943	ЭП-3-300-25-Б1-0-А	0,75	55	165	203	Э	23
2с-27-2ЭГ	200	6,3	425	25Л	Water-Steam	0,18	250	140	23	203	220	130	550	-	1346	1166	ГЗ-Б.300/24	0,75	58	165	218	Э	23
2с-27-2ЭЧ	200	6,3	425	25Л	Water-Steam	0,18	250	140	23	203	220	130	550	-	1600	1450	ПЭМ-Б2М	0,55	55	165	205	Э	23
2с-27-2ЭК	200	6,3	425	25Л	Water-Steam	0,18	250	140	23	203	220	130	550	-	1125	975	MODACT MON 52032.12J2N	1,1	55	165	213	Э	23
2с-27-2ЭМ	200	6,3	425	25Л	Water-Steam	0,18	250	140	23	203	220	130	550	-	1366	1217	Н-Б1-08	1,32	60	165	218	Э	23
2с-27-2ЭД	200	6,3	425	25Л	Water-Steam	0,18	250	140	23	203	220	130	550	-	1205	1055	AUMA SA14.6-F14-380/50/3-22	0,8	63	165	211	Э	23
2с-27-2ЭН	200	6,3	425	25Л	Water-Steam	0,18	250	140	23	203	220	130	550	-	1092	943	ЭП-3-300-25-Б1-0-А	0,75	55	165	203	Э	23
1013-200-Ц3	200	13,7*	560	15Х1М1Ф	Steam	0,46	1000	190	24	203	273	150	700	-	1500	1245	-	-	-	817	-	Ц	26
1013-200-К3	200	13,7*	560	15Х1М1Ф	Steam	0,46	1000	190	24	203	273	150	700	-	1255	1000	-	-	-	785	-	К	27
1013-200-Э	200	13,7*	560	15Х1М1Ф	Steam	0,46	1000	190	24	203	273	150	700	-	1514	1264	795-Э-0	4,25	65	701	878	Э	29
1013-200-ЭГ	200	13,7*	560	15Х1М1Ф	Steam	0,46	1000	190	24	203	273	150	700	-	1518	1270	ГЗ-Г.2500/24	5,5	60	787	982	Э	29
1013-200-ЭК	200	13,7*	560	15Х1М1Ф	Steam	0,46	1000	190	24	203	273	150	700	-	1952	1724	MODACT MON 52036.4202N	5,5	71	787	1096	Э	29
1013-200-ЭМ	200	13,7*	560	15Х1М1Ф	Steam	0,46	1000	190	24	203	273	150	700	-	1950	1690	Н-Г-11	4,25	72	787	952	Э	29

** - Pressure, P. ** - The drag coefficient is determined relative to the saddle section*

Gate Valves

Identification	DN, mm	PN, MPa	Tmax of the Medium, °C	Body Material, Steel	Working Medium	ζ**, not more than	Мкр., N•m, not more than	Operating Stroke, mm	Full Stroke Rotation Number	D, mm	D1, mm	D saddle, mm	L, mm	d, mm	H, mm	h, mm	Electric Actuator Identification	N, kW	t of the Stroke, sec.	Weight without Electric Actuator, kg	Full Weight, kg	Control Method	Figure
1013-200-ЭД	200	13,7*	560	15Х1М1Ф	Steam	0,46	1000	190	24	203	273	150	700	-	1646	1398	SA14.6/GK25.2-F25-380/50/3-22	3,3	45	787	866	Э	29
1013-200-ЭН	200	13,7*	560	15Х1М1Ф	Steam	0,46	1000	190	24	203	273	150	700	-	1805	1545	ГИЮМ.303344.001-06	3,2	72	787	882	Э	29
881-200-ЦЗ	200	25*	545	15Х1М1Ф	Steam	0,4	3900	245	24,5	208	345	175	900	-	2052	1792	-	-	-	1838	-	Ц	26
881-200-КЗ	200	25*	545	15Х1М1Ф	Steam	0,4	3900	245	24,5	208	345	175	900	-	1875	1665	-	-	-	1824	-	К	27
881-200-Э	200	25*	545	15Х1М1Ф	Steam	0,4	3900	245	24,5	208	345	175	900	-	2087	1827	797-Э-0	11,8	44	1490	1947	Э	29
881-200-ЭГ	200	25*	545	15Х1М1Ф	Steam	0,4	3900	245	24,5	208	345	175	900	-	1950	1690	ГЗ-Д.5000/12	5,5	123	1530	1790	Э	29
881-200-ЭМ	200	25*	545	15Х1М1Ф	Steam	0,4	3900	245	24,5	208	345	175	900	-	2620	2360	Н-Д-17	4,3	147	1530	1900	Э	29
881-200-ЭД	200	25*	545	15Х1М1Ф	Steam	0,4	3900	245	24,5	208	345	175	900	-	2134	1874	SA16.2/GK30.2-F30-380/50/3-22	6,0	65	1530	1763	Э	29
884-200-Г	200	28,4*	510	15Х1М1Ф	Steam	0,28	1250	230	29	201	284	175	650	-	1850	1630	-	-	-	1093	-	М	25
884-200-Э	200	28,4*	510	15Х1М1Ф	Steam	0,28	1250	230	29	201	284	175	650	-	1732	1509	795-Э-0-V	3,2	82	1083	1260	Э	29
884-200-ЭГ	200	28,4*	510	15Х1М1Ф	Steam	0,28	1250	230	29	201	284	175	650	-	1687	1464	ГЗ-Г.2500/24	5,5	50	1095	1290	Э	29
884-200-ЭМ	200	28,4*	510	15Х1М1Ф	Steam	0,28	1250	230	29	201	284	175	650	-	2093	1870	Н-Г-11	4,25	87	1095	1260	Э	29
884-200-ЭД	200	28,4*	510	15Х1М1Ф	Steam	0,28	1250	230	29	201	284	175	650	-	1817	1594	SA14.6/GK25.2-F25-380/50/3-22	3,3	54	1095	1231	Э	29
884-200-ЭН	200	28,4*	510	15Х1М1Ф	Steam	0,28	1250	230	29	201	284	175	650	-	2040	1820	ГИЮМ.303344.001-06	3,2	87	1095	1195	Э	29
880-200-ЦЗ	200	37,3*	280	15ГС	Water	0,46	1750	190	24	203	276	150	630	-	1482	1260	-	-	-	918	-	Ц	26
880-200-КЗ	200	37,3*	280	15ГС	Water	0,46	1750	190	24	203	276	150	630	-	1237	1015	-	-	-	890	-	К	27
880-200-Э	200	37,3*	280	15ГС	Water	0,46	1750	190	24	203	276	150	630	-	1285	1060	795-Э-0	4,25	66	802	985	Э	29
880-200-ЭГ	200	37,3*	280	15ГС	Water	0,46	1750	190	24	203	276	150	630	-	1488	1266	ГЗ-Г.2500/24	5,5	60	898	1093	Э	29
880-200-ЭМ	200	37,3*	280	15ГС	Water	0,46	1750	190	24	203	276	150	630	-	1840	1625	Н-Г-11	4,25	72	898	1063	Э	29
880-200-ЭД	200	37,3*	280	15ГС	Water	0,46	1750	190	24	203	276	150	630	-	1614	1396	SA14.6/GK25.2-F25-380/50/3-22	3,3	45	898	1034	Э	29
880-200-ЭН	200	37,3*	280	15ГС	Water	0,46	1750	190	24	203	276	150	630	-	1790	1575	ГИЮМ.303344.001-06	3,2	72	898	993	Э	29
1511-200-МБ	200	10	450	15ГС	Water-Steam	0,5	310	175	29	195	219	150	500	-	1168	1000	-	-	-	268	-	М	25
1511-200-ЦЗБ	200	10	450	15ГС	Water-Steam	0,5	310	175	29	195	219	150	500	-	1082	914	-	-	-	288	-	Ц	26
1511-200-КЗБ	200	10	450	15ГС	Water-Steam	0,5	310	175	29	195	219	150	500	-	944	776	-	-	-	290	-	К	27
1511-200-ЭГ	200	10	450	15ГС	Water-Steam	0,5	310	175	29	195	219	150	500	-	1200	1032	ГЗ-В.600/24	1,5	73	299	414	Э	19
1511-200-ЭЧ	200	10	450	15ГС	Water-Steam	0,5	310	175	29	195	219	150	500	-	1546	1378	ПЭМ-В2-630-25-36М	3,1	70	299	386	Э	19
1511-200-ЭМБ	200	10	450	15ГС	Water-Steam	0,5	310	175	29	195	219	150	500	-	1450	1282	Н-В-02	3,2	73	299	393	Э	19
1511-200-ЭД	200	10	450	15ГС	Water-Steam	0,5	310	175	29	195	219	150	500	-	1266	1098	AUMA SA14.6-F14-380/50/3-22	0,8	79	299	342	Э	19
1511-200-ЭН	200	10	450	15ГС	Water-Steam	0,5	310	175	29	195	219	150	500	-	1321	1198	ЭП-3-630-24-В-0-А	1,85	73	299	374	Э	19
885-225-ЦЗ	225	9,8*	540	15Х1М1Ф	Steam	0,9	1100	230	29	230	284	175	700	-	1645	1399	-	-	-	848	-	Ц	26
885-225-КЗ	225	9,8*	540	15Х1М1Ф	Steam	0,9	1100	230	29	230	284	175	700	-	1400	1155	-	-	-	818	-	К	27
885-225-Э	225	9,8*	540	15Х1М1Ф	Steam	0,9	1100	230	29	230	284	175	700	-	1649	1404	795-Э-0	4,25	79	732	915	Э	29
885-225-ЭГ	225	9,8*	540	15Х1М1Ф	Steam	0,9	1100	230	29	230	284	175	700	-	1660	1415	ГЗ-Г.2500/24	5,5	73	784	979	Э	29
885-225-ЭМ	225	9,8*	540	15Х1М1Ф	Steam	0,9	1100	230	29	230	284	175	700	-	1990	1770	Н-Г-11	4,25	86	784	949	Э	29
885-225-ЭД	225	9,8*	540	15Х1М1Ф	Steam	0,9	1100	230	29	230	284	175	700	-	1789	1544	SA14.6/GK25.2-F25-380/50/3-22	3,3	54	784	920	Э	29
885-225-ЭН	225	9,8*	540	15Х1М1Ф	Steam	0,9	1100	230	29	230	284	175	700	-	1945	1725	ГИЮМ.303344.001-06	3,2	87	784	884	Э	29
1012-225-ЦЗ	225	23,5*	250	15ГС	Water	0,6	1600	230	29	226	273	175	700	-	1645	1399	-	-	-	848	-	Ц	26
1012-225-КЗ	225	23,5*	250	15ГС	Water	0,6	1600	230	29	226	273	175	700	-	1400	1155	-	-	-	818	-	К	27
1012-225-Э	225	23,5*	250	15ГС	Water	0,6	1600	230	29	226	273	175	700	-	1649	1404	795-Э-0	4,25	79	730	913	Э	29
1012-225-ЭГ	225	23,5*	250	15ГС	Water	0,6	1600	230	29	226	273	175	700	-	1660	1415	ГЗ-Г.2500/24	5,5	73	782	977	Э	29
1012-225-ЭМ	225	23,5*	250	15ГС	Water	0,6	1600	230	29	226	273	175	700	-	2084	1829	Н-Г-11	4,25	86	782	947	Э	29
1012-225-ЭД	225	23,5*	250	15ГС	Water	0,6	1600	230	29	226	273	175	700	-	1789	1544	SA14.6/GK25.2-F25-380/50/3-22	3,3	54	782	918	Э	29
1012-225-ЭН	225	23,5*	250	15ГС	Water	0,6	1600	230	29	226	273	175	700	-	1945	1690	ГИЮМ.303344.001-06	3,2	87	782	882	Э	29
1017-250-ЦЗ	250	4,0*	545	15Х1М1Ф	Steam	0,4	400	235	29	248	273	200	650	-	1519	1275	-	-	-	604	-	Ц	26
1017-250-КЗ	250	4,0*	545	15Х1М1Ф	Steam	0,4	400	235	29	248	273	200	650	-	1283	1034	-	-	-	596	-	К	27
1017-250-Э	250	4,0*	545	15Х1М1Ф	Steam	0,4	400	235	29	248	273	200	650	-	1473	1233	793-Э-0-II	1,32	86	512	610	Э	29
1017-250-ЭГ	250	4,0*	545	15Х1М1Ф	Steam	0,4	400	235	29	248	273	200	650	-	1560	1316	ГЗ-В.600/24	1,5	73	551	666	Э	29
1017-250-ЭЧ	250	4,0*	545	15Х1М1Ф	Steam	0,4	400	235	29	248	273	200	650	-	1902	1662	ПЭМ-В2-630-25-36М	3,1	70	551	591	Э	29

** - Pressure, P. ** - The drag coefficient is determined relative to the saddle section*

Identification	DN, mm	PN, MPa	Tmax of the Medium, °C	Body Material, Steel	Working Medium	ζ**, not more than	Мкр., N•m, not more than	Operating Stroke, mm	Full Stroke Rotation Number	D, mm	D1, mm	D saddle, mm	L, mm	d, mm	H, mm	h, mm	Electric Actuator Identification	N, kW	t of the Stroke, sec.	Weight without Electric Actuator, kg	Full Weight, kg	Control Method	Figure
1017-250-ЭМ	250	4,0*	545	15Х1М1Ф	Steam	0,4	400	235	29	248	273	200	650	-	1747	1507	Н-В-08	3,2	73	551	645	Э	29
1017-250-ЭК	250	4,0*	545	15Х1М1Ф	Steam	0,4	400	235	29	248	273	200	650	-	1610	1370	MODACT MON 52032.12J2N	0,75	70	551	616	Э	29
1017-250-ЭД	250	4,0*	545	15Х1М1Ф	Steam	0,4	400	235	29	248	273	200	650	-	1598	1358	AUMA SA14.6-F14-380/50/3-22	3,3	54	551	597	Э	29
1017-250-ЭН	250	4,0*	545	15Х1М1Ф	Steam	0,4	400	235	29	248	273	200	650	-	1822	1582	ЭП-3-1000-24-В-0-А	2,5	50	551	631	Э	29
1016-250-М	250	10	450	15ГС	Water-Steam	0,4	600	235	29	244	276	200	650	640	1245	1010	-	-	-	565	-	М	25
1016-250-Ц3	250	10	450	15ГС	Water-Steam	0,4	600	235	29	244	276	200	650	-	1519	1275	-	-	-	604	-	Ц	26
1016-250-К3	250	10	450	15ГС	Water-Steam	0,4	600	235	29	244	276	200	650	-	1283	1034	-	-	-	596	-	К	27
1016-250-Э	250	10	450	15ГС	Water-Steam	0,4	600	235	29	244	276	200	650	-	1521	1281	793-Э-0	3,20	72	512	620	Э	29
1016-250-ЭГ	250	10	450	15ГС	Water-Steam	0,4	600	235	29	244	276	200	650	-	1530	1295	Г3-В.900/24	2,2	73	551	666	Э	29
1016-250-ЭЧ	250	10	450	15ГС	Water-Steam	0,4	600	235	29	244	276	200	650	-	1902	1662	ПЭМ-В2-630-25-36М	3,1	70	551	591	Э	29
1016-250-ЭМ	250	10	450	15ГС	Water-Steam	0,4	600	235	29	244	276	200	650	-	1771	1531	Н-В-08	3,2	73	551	645	Э	29
1016-250-ЭК	250	10	450	15ГС	Water-Steam	0,4	600	235	29	244	276	200	650	-	1610	1370	MODACT MON 52032.12J2N	0,75	70	551	616	Э	29
1016-250-ЭД	250	10	450	15ГС	Water-Steam	0,4	600	235	29	244	276	200	650	-	1598	1358	AUMA SA16.2-F16-380/50/3-22	1,5	79	551	618	Э	29
1016-250-ЭН	250	10	450	15ГС	Water-Steam	0,4	600	235	29	244	276	200	650	-	1822	1582	ЭП-3-1000-24-В-0-А	2,5	73	551	631	Э	29
883-250-Ц3-02	250	9,8*	540	15Х1М1Ф	Steam	0,5	2900	290	29	275	330	220	750	-	2048	1790	-	-	-	1800	-	Ц	26
883-250-К3-02	250	9,8*	540	15Х1М1Ф	Steam	0,5	2900	290	29	275	330	220	750	-	1750	1492	-	-	-	1785	-	К	27
883-250-Э-02	250	9,8*	540	15Х1М1Ф	Steam	0,5	2900	290	29	275	330	220	750	-	1763	1705	797-Э-0	11,8	45	1553	1970	Э	29
883-250-ЭГ-02	250	9,8*	540	15Х1М1Ф	Steam	0,5	2900	290	29	275	330	220	750	-	2020	1760	Г3-Д.5000/12	5,5	145	1580	1840	Э	29
883-250-ЭМ-02	250	9,8*	540	15Х1М1Ф	Steam	0,5	2900	290	29	275	330	220	750	-	2688	2430	Н-Д-17	4,3	174	1553	1923	Э	29
883-250-ЭД-02	250	9,8*	540	15Х1М1Ф	Steam	0,5	2900	290	29	275	330	220	750	-	2043	2301	SA16.2/GK30.2-F30-380/50/3-22	6,0	73	1580	1813	Э	29
883-250-Ц3	250	13,7*	560	15Х1М1Ф	Steam	0,24	2900	290	29	238	330	220	750	-	2048	1790	-	-	-	1810	-	Ц	26
883-250-К3	250	13,7*	560	15Х1М1Ф	Steam	0,24	2900	290	29	238	330	220	750	-	1750	1492	-	-	-	1795	-	К	27
883-250-Э	250	13,7*	560	15Х1М1Ф	Steam	0,24	2900	290	29	238	330	220	750	-	1763	1705	797-Э-0	11,8	45	1630	2000	Э	29
883-250-ЭГ	250	13,7*	560	15Х1М1Ф	Steam	0,24	2900	290	29	238	330	220	750	-	2020	1760	Г3-Д.5000/12	5,5	145	1630	1800	Э	29
883-250-ЭМ	250	13,7*	560	15Х1М1Ф	Steam	0,24	2900	290	29	238	330	220	750	-	2688	2430	Н-Д-17	4,3	174	1593	1963	Э	29
883-250-ЭД	250	13,7*	560	15Х1М1Ф	Steam	0,24	2900	290	29	238	330	220	750	-	2043	2301	SA16.2/GK30.2-F30-380/50/3-22	6,0	73	1630	1863	Э	29
883-250-Ц3-01	250	13,7*	545	15Х1М1Ф	Steam	0,24	2900	290	29	251	330	220	750	-	2048	1790	-	-	-	1830	-	Ц	26
883-250-К3-01	250	13,7*	545	15Х1М1Ф	Steam	0,24	2900	290	29	251	330	220	750	-	1750	1492	-	-	-	1820	-	К	27
883-250-Э-01	250	13,7*	545	15Х1М1Ф	Steam	0,24	2900	290	29	251	330	220	750	-	1763	1705	797-Э-0	11,8	45	1593	2000	Э	29
883-250-ЭГ-01	250	13,7*	545	15Х1М1Ф	Steam	0,24	2900	290	29	251	330	220	750	-	2020	1760	Г3-Д.5000/12	5,5	145	1630	1890	Э	29
883-250-ЭМ-01	250	13,7*	545	15Х1М1Ф	Steam	0,24	2900	290	29	251	330	220	750	-	2688	2430	Н-Д-17	4,3	174	1630	2000	Э	29
883-250-ЭД-01	250	13,7*	545	15Х1М1Ф	Steam	0,24	2900	290	29	251	330	220	750	-	2043	2301	SA16.2/GK30.2-F30-380/50/3-22	6,0	73	1630	1863	Э	29
882-250-Ц3	250	23,5*	250	15ГС	Water	1,7	1600	230	29	271	340	175	650	-	1615	1395	-	-	-	1040	-	Ц	26
882-250-К3	250	23,5*	250	15ГС	Water	1,7	1600	230	29	271	340	175	650	-	1370	1150	-	-	-	1011	-	К	27
882-250-Э	250	23,5*	250	15ГС	Water	1,7	1600	230	29	271	340	175	650	-	1623	1405	795-Э-0	4,25	82	921	1104	Э	29
882-250-ЭГ	250	23,5*	250	15ГС	Water	1,7	1600	230	29	271	340	175	650	-	1674	1414	Г3-Г.2500/24	5,5	73	963	1158	Э	29
882-250-ЭМ	250	23,5*	250	15ГС	Water	1,7	1600	230	29	271	340	175	650	-	2090	1830	Н-Г-11	4,25	86	963	1128	Э	29
882-250-ЭД	250	23,5*	250	15ГС	Water	1,7	1600	230	29	271	340	175	650	-	1763	1545	SA14.6/GK25.2-F25-380/50/3-22	3,3	79	963	1099	Э	29
882-250-ЭН	250	23,5*	250	15ГС	Water	1,7	1600	230	29	271	340	175	650	-	1943	1725	ГИЮМ.303344.001-06	3,2	73	963	1063	Э	29
881-250-Э	250	25*	545	15Х1М1ФЛ	Steam	0,38	8800	315	26,5	270	426	220	1150	-	2713	2400	854-Э-0	20	80	3764	4500	Э	30
881-250-ЭД	250	25*	545	15Х1М1ФЛ	Steam	0,38	8800	315	26,5	270	426	220	1150	-	2735	2415	SA16.2/GK40.2-F40-380/50/3-22	6,0	140	3865	4182	Э	30
884-250-Г	250	28,4*	510	15Х1М1Ф	Steam	1,0	1250	230	29	245	340	175	650	-	1850	1630	-	-	-	1088	-	М	25
884-250-Э	250	28,4*	510	15Х1М1Ф	Steam	1,0	1250	230	29	245	340	175	650	-	1752	1509	795-Э-0-V	4,25	82	1050	1284	Э	29
884-250-ЭГ	250	28,4*	510	15Х1М1Ф	Steam	1,0	1250	230	29	245	340	175	650	-	1730	1510	Г3-Г.2500/24	5,5	73	1090	1285	Э	29
884-250-ЭМ	250	28,4*	510	15Х1М1Ф	Steam	1,0	1250	230	29	245	340	175	650	-	2147	1927	Н-Г-11	4,25	87	1090	1255	Э	29
884-250-ЭД	250	28,4*	510	15Х1М1Ф	Steam	1,0	1250	230	29	245	340	175	650	-	1900	1678	SA14.6/GK25.2-F25-380/50/3-22	3,3	79	1090	1226	Э	29
884-250-ЭН	250	28,4*	510	15Х1М1Ф	Steam	1,0	1250	230	29	245	340	175	650	-	2040	1820	ГИЮМ.303344.001-06	3,2	87	1090	1190	Э	29
880-250-Ц3	250	37,3*	280	15ГС	Water	1,2	3900	245	26	245	330	175	750	-	1978	1720	-	-	-	1842	-	Ц	26

** - Pressure, P. ** - The drag coefficient is determined relative to the saddle section*

Gate Valves

Identification	DN, mm	PN, MPa	Tmax of the Medium, °C	Body Material, Steel	Working Medium	ζ**, not more than	Мкр., N•m, not more than	Operating Stroke, mm	Full Stroke Rotation Number	D, mm	D1, mm	D saddle, mm	L, mm	d, mm	H, mm	h, mm	Electric Actuator Identification	N, kW	t of the Stroke, sec.	Weight without Electric Actuator, kg	Full Weight, kg	Control Method	Figure
880-250-КЗ	250	37,3*	280	15ГС	Water	1,2	3900	245	26	245	330	175	750	-	1678	1420	-	-	-	1830	-	К	27
880-250-Э	250	37,3*	280	15ГС	Water	1,2	3900	245	26	245	330	175	750	-	1763	1705	797-Э-0	11,8	39	1565	1982	Э	29
880-250-ЭГ	250	37,3*	280	15ГС	Water	1,2	3900	245	26	245	330	175	750	-	1825	1567	ГЗ-Д.5000/12	5,5	130	1605	1863	Э	29
880-250-ЭМ	250	37,3*	280	15ГС	Water	1,2	3900	245	26	245	330	175	750	-	2618	2360	Н-Д-17	4,25	147	1605	1975	Э	29
880-250-ЭД	250	37,3*	280	15ГС	Water	1,2	3900	245	26	245	330	175	750	-	1822	1564	SA16.2/GK30.2-F30-380/50/3-22	6,0	71	1605	1938	Э	29
1511-250-ЦЗ	250	10	450	15ГС	Water-Steam	0,6	490	205	27	244	276	180	630	-	1339	1126	-	-	-	578	-	Ц	21
1511-250-КЗ	250	10	450	15ГС	Water-Steam	0,6	490	205	27	244	276	180	630	-	1095	882	-	-	-	552	-	К	22
1511-250-ЭГ	250	10	450	15ГС	Water-Steam	0,6	490	205	27	244	276	180	630	-	1245	1032	ГЗ-В.600/24	1,5	78	536	651	Э	19
1511-250-ЭЧ	250	10	450	15ГС	Water-Steam	0,6	490	205	27	244	276	180	630	-	1591	1378	ПЭМ-В2-630-25-36М	3,1	65	536	623	Э	19
1511-250-ЭМ	250	10	450	15ГС	Water-Steam	0,6	490	205	27	244	276	180	630	-	1658	1445	Н-В-02	3,2	60	536	630	Э	19
1511-250-ЭД	250	10	450	15ГС	Water-Steam	0,6	490	205	27	244	276	180	630	-	1242	1074	AUMA SA16.2-F16-380/50/3-22	1,5	74	536	612	Э	19
1511-250-ЭН	250	10	450	15ГС	Water-Steam	0,6	490	205	27	244	276	180	630	-	1366	1198	ЭП-3-630-24-В-0-А	3,8	78	536	611	Э	19
2с-26-3Н	250	6,3	425	25Л	Water-Steam	0,3	1040	224	28	254	275	210	650	470	1206	1017	-	-	-	380	-	Ц	21
2с-27-3Н	250	6,3	425	25Л	Water-Steam	0,3	1040	224	28	254	275	210	650	470	1045	856	-	-	-	367	-	К	22
2с-28-3Н	250	10	450	25Л	Water-Steam	0,3	1040	224	28	244	275	210	650	470	1206	1017	-	-	-	380	-	Ц	21
2с-29-3Н	250	10	450	25Л	Water-Steam	0,3	1040	224	28	244	275	210	650	470	1045	856	-	-	-	367	-	К	22
2с-ЭГ-3	250	10	450	25Л	Water-Steam	0,3	1040	224	28	244	275	210	650	-	1209	1109	ГЗ-Г.2500/24	5,5	70	337	532	Э	24
2с-ЭК-3	250	10	450	25Л	Water-Steam	0,3	1040	224	28	244	275	210	650	-	1470	1280	MODACT MON 52035.42O2N	5,5	37	337	548	Э	24
2с-ЭМ-3	250	10	450	25Л	Water-Steam	0,3	1040	224	28	244	275	210	650	-	1733	1543	Н-Г-11	4,25	72	337	502	Э	24
2с-ЭД-3	250	10	450	25Л	Water-Steam	0,3	1040	224	28	244	275	210	650	-	1335	1145	AUMA SA25.1-F25-380/50/3-22	4,0	76	337	472	Э	24
2с-ЭН-3	250	10	450	25Л	Water-Steam	0,3	1040	224	28	244	275	210	650	-	1610	1420	ГИЮМ.303344.001-06	3,2	84	337	432	Э	24
2с-27-3ЭГ	250	6,3	425	25Л	Water-Steam	0,3	1040	224	28	254	275	210	650	-	1209	1109	ГЗ-Г.2500/24	5,5	70	337	532	Э	24
2с-27-3ЭК	250	6,3	425	25Л	Water-Steam	0,3	1040	224	28	254	275	210	650	-	1470	1280	MODACT MON 52035.42O2N	5,5	37	337	548	Э	24
2с-27-3ЭМ	250	6,3	425	25Л	Water-Steam	0,3	1040	224	28	254	275	210	650	-	1733	1543	Н-Г-11	4,25	72	337	502	Э	24
2с-27-3ЭД	250	6,3	425	25Л	Water-Steam	0,3	1040	224	28	254	275	210	650	-	1335	1145	AUMA SA25.1-F25-380/50/3-22	4,0	76	337	472	Э	24
2с-27-3ЭН	250	6,3	425	25Л	Water-Steam	0,3	1040	224	28	254	275	210	650	-	1610	1420	ГИЮМ.303344.001-06	3,2	84	337	432	Э	24
2с-26-4Н	300	6,3	425	25Л	Water-Steam	0,24	1040	224	28	303	325	210	750	470	1206	1017	-	-	-	425	-	Ц	21
2с-27-4Н	300	6,3	425	25Л	Water-Steam	0,24	1040	224	28	303	325	210	750	470	1045	856	-	-	-	411	-	К	22
2с-28-4Н	300	10	450	25Л	Water-Steam	0,24	1040	224	28	290	325	210	750	470	1206	1017	-	-	-	425	-	Ц	21
2с-29-4Н	300	10	450	25Л	Water-Steam	0,24	1040	224	28	290	325	210	750	470	1045	856	-	-	-	411	-	К	22
2с-ЭГ-4	300	10	450	25Л	Water-Steam	0,24	1040	224	28	290	325	210	750	-	1209	1109	ГЗ-Г.2500/24	5,5	70	380	575	Э	24
2с-ЭК-4	300	10	450	25Л	Water-Steam	0,24	1040	224	28	290	325	210	750	-	1470	1280	MODACT MON 52035.42O2N	5,5	37	380	591	Э	24
2с-ЭМ-4	300	10	450	25Л	Water-Steam	0,24	1040	224	28	290	325	210	750	-	1733	1543	Н-Г-11	4,25	72	380	545	Э	24
2с-ЭД-4	300	10	450	25Л	Water-Steam	0,24	1040	224	28	290	325	210	750	-	1335	1145	AUMA SA25.1-F25-380/50/3-22	4,0	76	380	515	Э	24
2с-ЭН-4	300	10	450	25Л	Water-Steam	0,24	1040	224	28	290	325	210	750	-	1610	1420	ГИЮМ.303344.001-06	3,2	84	380	475	Э	24
2с-27-4ЭГ	300	6,3	425	25Л	Water-Steam	0,24	1040	224	28	303	325	210	750	-	1209	1109	ГЗ-Г.2500/24	5,5	70	380	575	Э	24
2с-27-4ЭК	300	6,3	425	25Л	Water-Steam	0,24	1040	224	28	303	325	210	750	-	1470	1280	MODACT MON 52035.42O2N	5,5	37	380	591	Э	24
2с-27-4ЭМ	300	6,3	425	25Л	Water-Steam	0,24	1040	224	28	303	325	210	750	-	1733	1543	Н-Г-11	4,25	72	380	545	Э	24
2с-27-4ЭД	300	6,3	425	25Л	Water-Steam	0,24	1040	224	28	303	325	210	750	-	1335	1145	AUMA SA25.1-F25-380/50/3-22	4,0	76	380	515	Э	24
2с-27-4ЭН	300	6,3	425	25Л	Water-Steam	0,24	1040	224	28	303	325	210	750	-	1610	1420	ГИЮМ.303344.001-06	3,2	84	380	475	Э	24
883-300-ЦЗ	300	13,7*	560	15Х1М1Ф	Steam	0,65	2900	290	29	281	400	220	1000	-	2048	1790	-	-	-	1955	-	Ц	26
883-300-КЗ	300	13,7*	560	15Х1М1Ф	Steam	0,65	2900	290	29	281	400	220	1000	-	1750	1492	-	-	-	1945	-	К	27
883-300-Э	300	13,7*	560	15Х1М1Ф	Steam	0,65	2900	290	29	281	400	220	1000	-	2156	1896	797-Э-0	11,8	44	1730	2147	Э	29
883-300-ЭГ	300	13,7*	560	15Х1М1Ф	Steam	0,65	2900	290	29	281	400	220	1000	-	1950	1690	ГЗ-Д.5000/12	5,5	145	1730	1990	Э	29
883-300-ЭМ	300	13,7*	560	15Х1М1Ф	Steam	0,65	2900	290	29	281	400	220	1000	-	2693	2433	Н-Д-17	4,3	174	1730	2100	Э	29
883-300-ЭД	300	13,7*	560	15Х1М1Ф	Steam	0,65	2900	290	29	281	400	220	1000	-	2204	1944	SA16.2/GK30.2-F30-380/50/3-22	6,0	79	1730	1963	Э	29
882-300-ЦЗ	300	23,5*	250	15ГС	Water	2,8	1600	230	29	316	390	175	1000	-	1615	1385	-	-	-	1040	-	Ц	26
882-300-КЗ	300	23,5*	250	15ГС	Water	2,8	1600	230	29	316	390	175	1000	-	1370	1150	-	-	-	1011	-	К	27

** - Pressure, P. ** - The drag coefficient is determined relative to the saddle section*

Identification	DN, mm	PN, MPa	Tmax of the Medium, °C	Body Material, Steel	Working Medium	ζ**, not more than	Мкр., N•m, not more than	Operating Stroke, mm	Full Stroke Rotation Number	D, mm	D1, mm	D saddle, mm	L, mm	d, mm	H, mm	h, mm	Electric Actuator Identification	N, kW	t of the Stroke, sec.	Weight without Electric Actuator, kg	Full Weight, kg	Control Method	Figure
882-300-Э	300	23,5*	250	15ГС	Water	2,8	1600	230	29	316	390	175	1000		1657	1409	795-Э-0	4,25	82	1337	1573	Э	29
882-300-ЭГ	300	23,5*	250	15ГС	Water	2,8	1600	230	29	316	390	175	1000	-	1662	1414	ГЗ-Г.2500/24	5,5	73	1093	1288	Э	29
882-300-ЭМ	300	23,5*	250	15ГС	Water	2,8	1600	230	29	316	390	175	1000	-	2087	1827	Н-Г-11	4,25	87	1093	1258	Э	29
882-300-ЭД	300	23,5*	250	15ГС	Water	2,8	1600	230	29	316	390	175	1000	-	1763	1545	SA14.6/GK25.2-F30-380/50/3-22	3,3	79	1093	1229	Э	29
882-300-ЭН	300	23,5*	250	15ГС	Water	2,8	1600	230	29	316	390	175	1000	-	1943	1725	ГИЮМ.303344.001-06	3,2	73	1093	1193	Э	29
880-300-ЦЗ	300	37,3*	280	15ГС	Water	2,5	3900	245	24,5	281	400	175	1000	-	1988	1730	-	-	-	2010	-	Ц	26
880-300-КЗ	300	37,3*	280	15ГС	Water	2,5	3900	245	24,5	281	400	175	1000	-	1675	1417	-	-	-	2306	-	К	27
880-300-Э	300	37,3*	280	15ГС	Water	2,5	3900	245	24,5	281	400	175	1000	-	2090	1832	797-Э-0	11,8	37	1593	2010	Э	29
880-300-ЭГ	300	37,3*	280	15ГС	Water	2,5	3900	245	24,5	281	400	175	1000	-	1958	1700	ГЗ-Д.5000/12	5,5	123	1593	1851	Э	29
880-300-ЭМ	300	37,3*	280	15ГС	Water	2,5	3900	245	24,5	281	400	175	1000	-	2618	2360	Н-Д-17	4,25	147	1593	1963	Э	29
880-300-ЭД	300	37,3*	280	15ГС	Water	2,5	3900	245	24,5	281	400	175	1000	-	2062	1804	SA16.2/GK30.2-F30-380/50/3-22	6,0	67	1593	1826	Э	29
1511-300-ЦЗ	300	10	450	15ГС	Water-Steam	0,6	490	205	27	290	330	180	750	-	1339	1126	-	-	-	622	-	Ц	21
1511-300-КЗ	300	10	450	15ГС	Water-Steam	0,6	490	205	27	290	330	180	750	-	1095	882	-	-	-	596	-	К	22
1511-300-ЭГ	300	10	450	15ГС	Water-Steam	0,6	490	205	27	290	330	180	750	-	1245	1032	ГЗ-В.600/24	1,5	78	580	695	Э	24
1511-300-ЭЧ	300	10	450	15ГС	Water-Steam	0,6	490	205	27	290	330	180	750	-	1591	1378	ПЭМ-В2-630-25-36М	3,1	65	580	667	Э	24
1511-300-ЭМ	300	10	450	15ГС	Water-Steam	0,6	490	205	27	290	330	180	750	-	1658	1445	Н-В-02	3,2	60	580	685	Э	24
1511-300-ЭД	300	10	450	15ГС	Water-Steam	0,6	490	205	27	290	330	180	750	-	1242	1074	AUMA SA16.2-F16-380/50/3-22	1,5	74	580	667	Э	24
1511-300-ЭН	300	10	450	15ГС	Water-Steam	0,6	490	205	27	290	330	180	750	-	1366	1198	ЭП-3-630-24-В-0-А	3,8	78	580	680	Э	24
880-325-ЭЛХМ	325	37,3*	280	15Х1М1ФЛ	Water	1,5	7200	295	24,5	330	436	220	1100	-	2690	2400	854-Э-0	20,0	80	3264	4000	Э	30
880-325-ЭД	325	37,3*	280	15Х1М1ФЛ	Water	1,5	7200	295	24,5	330	436	220	1100	-	2735	2415	SA16.2/GK40.2-F40-380/50/3-22	6,0	140	3365	3682	Э	30
884-325-Э	325	28,4*	510	15Х1М1ФЛ	Steam	0,5	2650	300	30	326	440	260	1100	-	2095	1795	797-Э-0	11,8	46	2696	3113	Э	30
884-325-ЭГ	325	28,4*	510	15Х1М1ФЛ	Steam	0,5	2650	300	30	326	440	260	1100	-	2228	1929	ГЗ-Д.5000/12	5,5	123	2751	3009	Э	30
884-325-ЭМ	325	28,4*	510	15Х1М1ФЛ	Steam	0,5	2650	300	30	326	440	260	1100	-	2795	2495	Н-Д-17	4,3	180	2751	3121	Э	30
884-325-ЭД	325	28,4*	510	15Х1М1ФЛ	Steam	0,5	2650	300	30	326	440	260	1100	-	2427	2129	SA16.2/GK30.2-F30-380/50/3-22	6,0	80	2749	2938	Э	30
850-350-ЦЗ	350	4,0*	545	15Х1М1ФЛ	Steam	1,4	620	300	37,5	345	390	250	850	-	1696	1450	-	-	-	1090	-	Ц	21
850-350-КЗ	350	4,0*	545	15Х1М1ФЛ	Steam	1,4	620	300	37,5	345	390	250	850	-	1283	1034	-	-	-	1056	-	К	22
850-350-Э	350	4,0*	545	15Х1М1ФЛ	Steam	1,4	620	300	37,5	345	390	250	850	-	1770	1520	795-Э-0-II	6,00	54	873	1083	Э	31
850-350-ЭГ	350	4,0*	545	15Х1М1ФЛ	Steam	1,4	620	300	37,5	345	390	250	850	-	1800	1555	ГЗ-Г.2500/24	5,5	94	908	1103	Э	31
850-350-ЭЧ	350	4,0*	545	15Х1М1ФЛ	Steam	1,4	620	300	37,5	345	390	250	850	-	1902	1662	ПЭМ-В54-1000-25-216М	2,2	90	901	988	Э	31
850-350-ЭМ	350	4,0*	545	15Х1М1ФЛ	Steam	1,4	620	300	37,5	345	390	250	850	-	1771	1531	Н-Г-12	4,25	113	908	1073	Э	31
850-350-ЭК	350	4,0*	545	15Х1М1ФЛ	Steam	1,4	620	300	37,5	345	390	250	850	-	1610	1370	MODACT MON 52035.42O2N	5,5	50	959	1170	Э	31
850-350-ЭД	350	4,0*	545	15Х1М1ФЛ	Steam	1,4	620	300	37,5	345	390	250	850	-	1598	1358	SA14.6/GK25.2-F25-380/50/3-22	3,3	102	959	1095	Э	31
850-350-ЭН	350	4,0*	545	15Х1М1ФЛ	Steam	1,4	620	300	37,5	345	390	250	850	-	1822	1582	ГИЮМ.303344.001-06	5,5	94	908	1008	Э	31
880-350-ЭЛ	350	37,3*	280	20ГСЛ	Water	2,1	7200	295	24,5	356	490	220	1500	-	2700	2400	854-Э-0	20,0	80	3752	4488	Э	30
880-350-ЭД	350	37,3*	280	20ГСЛ	Water	2,1	7200	295	24,5	356	490	220	1500	-	2735	2415	SA16.2/GK40.2-F40-380/50/3-22	6,0	140	3873	4190	Э	30
2с-26-5Н	350	6,3	425	25Л	Water-Steam	0,23	1040	266	33	354	386	250	850	470	1365	1140	-	-	-	550	-	Ц	21
2с-27-5Н	350	6,3	425	25Л	Water-Steam	0,23	1040	266	33	354	386	250	850	470	1205	980	-	-	-	540	-	К	22
2с-ЭГ-5	350	6,3	425	25Л	Water-Steam	0,23	1040	266	33	354	386	250	850	-	1459	1234	ГЗ-Г.2500/24	5,5	83	509	704	Э	24
2с-ЭК-5	350	6,3	425	25Л	Water-Steam	0,23	1040	266	33	354	386	250	850	-	1625	1400	MODACT MON 52035.42O2N	5,5	44	509	720	Э	24
2с-ЭМ-5	350	6,3	425	25Л	Water-Steam	0,23	1040	266	33	354	386	250	850	-	1675	1450	Н-Г-11	4,25	99	509	622	Э	24
2с-ЭД-5	350	6,3	425	25Л	Water-Steam	0,23	1040	266	33	354	386	250	850	-	1495	1270	AUMA SA25.1-F25-380/50/3-22	4,0	90	509	644	Э	24
2с-ЭН-5	350	6,3	425	25Л	Water-Steam	0,23	1040	266	33	354	386	250	850	-	1776	1545	ГИЮМ.303344.001-06	3,2	99	509	604	Э	24
2с-28-5Н	350	10	450	25Л	Water-Steam	0,23	1040	266	33	339	386	250	850	470	1365	1140	-	-	-	595	-	Ц	21
2с-29-5Н	350	10	450	25Л	Water-Steam	0,23	1040	266	33	339	386	250	850	470	1205	980	-	-	-	585	-	К	22
2с-ЭГ-5Н	350	10	450	25Л	Water-Steam	0,23	1040	266	33	339	386	250	850	-	1459	1234	ГЗ-Г.2500/24	5,5	83	554	749	Э	24
2с-ЭК-5Н	350	10	450	25Л	Water-Steam	0,23	1040	266	33	339	386	250	850	-	1625	1400	MODACT MON 52035.42O2N	5,5	44	554	765	Э	24
2с-ЭМ-5Н	350	10	450	25Л	Water-Steam	0,23	1040	266	33	339	386	250	850	-	1675	1450	Н-Г-11	4,25	99	554	667	Э	24
2с-ЭД-5Н	350	10	450	25Л	Water-Steam	0,23	1040	266	33	339	386	250	850		1495	1270	AUMA SA25.1-F25-380/50/3-22	4,0	90	554	689	Э	24

** - Pressure, P. ** - The drag coefficient is determined relative to the saddle section*

Gate Valves

Identification	DN, mm	PN, MPa	Tmax of the Medium, °C	Body Material, Steel	Working Medium	ζ**, not more than	Мкр., N•m, not more than	Operating Stroke, mm	Full Stroke Rotation Number	D, mm	D1, mm	D saddle, mm	L, mm	d, mm	H, mm	h, mm	Electric Actuator Identification	N, kW	t of the Stroke, sec.	Weight without Electric Actuator, kg	Full Weight, kg	Control Method	Figure
2с-ЭН-5Н	350	10	450	25Л	Water-Steam	0,23	1040	266	33	339	386	250	850		1776	1545	ГИЮМ.303344.001-06	3,2	99	554	649	Э	24
850-400-ЦЗ	400	4,0*	545	15Х1М1ФЛ	Steam	0,16	1450	430	54	390	440	365	1000	-	2150	1910	-	-	-	2159	-	Ц	21
850-400-КЗ	400	4,0*	545	15Х1М1ФЛ	Steam	0,16	1450	430	54	390	440	365	1000	-	1283	1034	-	-	-	2125	-	К	22
850-400-Э	400	4,0*	545	15Х1М1ФЛ	Steam	0,16	1450	430	54	390	440	365	1000	-	2495	2150	795-Э-0-II-01	6,00	77	2047	2259	Э	31
850-400-ЭГ	400	4,0*	545	15Х1М1ФЛ	Steam	0,16	1450	430	54	390	440	365	1000	-	2339	2004	ГЗ-Г.2500/24	5,5	135	2077	2272	Э	31
850-400-ЭЧ	400	4,0*	545	15Х1М1ФЛ	Steam	0,16	1450	430	54	390	440	365	1000	-	2675	2333	ПЭМ-В66-1500-25-216М	4,0	130	2072	2170	Э	31
850-400-ЭМ	400	4,0*	545	15Х1М1ФЛ	Steam	0,16	1450	430	54	390	440	365	1000	-	2685	2348	Н-Г-12	4,25	162	2077	2242	Э	31
850-400-ЭК	400	4,0*	545	15Х1М1ФЛ	Steam	0,16	1450	430	54	390	440	365	1000	-	1610	1370	MODACT MON 52035.42O2N	5,5	72	2128	2339	Э	31
850-400-ЭД	400	4,0*	545	15Х1М1ФЛ	Steam	0,16	1450	430	54	390	440	365	1000	-	2550	2104	SA14.6/GK25.2-F25-380/50/3-22	3,3	147	2128	2264	Э	31
850-400-ЭН	400	4,0*	545	15Х1М1ФЛ	Steam	0,16	1450	430	54	390	440	365	1000	-	2580	2242	ГИЮМ.303344.001-06	5,5	132	2077	2177	Э	31
880-400-ЭА	400	37,3*	280	20ГСЛ	Water	2,5	8400	310	25,5	406	550	220	1500	-	2720	2415	854-Э-0	20,0	80	3869	4605	Э	30
880-400-ЭД	400	37,3*	280	20ГСЛ	Water	2,5	8400	310	25,5	406	550	220	1500	-	2755	2430	SA16.2/GK40.2-F40-380/50/3-22	6,0	140	3974	4291	Э	30
2с-26-6	400	6,3	425	25Л	Water-Steam	0,15	1040	266	33	401	426	250	950	470	1365	1140	-	-	-	603	-	Ц	21
2с-27-6	400	6,3	425	25Л	Water-Steam	0,15	1040	266	33	401	426	250	950	470	1205	980	-	-	-	602	-	К	22
2с-ЭГ-6	400	6,3	425	25Л	Water-Steam	0,15	1040	266	33	401	426	250	950	-	1459	1234	ГЗ-Г.2500/24	5,5	83	560	755	Э	24
2с-ЭК-6	400	6,3	425	25Л	Water-Steam	0,15	1040	266	33	401	426	250	950	-	1625	1400	MODACT MON 52035.42O2N	5,5	44	560	771	Э	24
2с-ЭМ-6	400	6,3	425	25Л	Water-Steam	0,15	1040	266	33	401	426	250	950	-	1675	1450	Н-Г-11	4,25	99	560	673	Э	24
2с-ЭД-6	400	6,3	425	25Л	Water-Steam	0,15	1040	266	33	401	426	250	950	-	1495	1270	AUMA SA25.1-F25-380/50/3-22	4,0	90	560	695	Э	24
2с-ЭН-6	400	6,3	425	25Л	Water-Steam	0,15	1040	266	33	401	426	250	950	-	1776	1545	ГИЮМ.303344.001-06	3,2	99	560	655	Э	24
2с-28-6	400	10	450	25Л	Water-Steam	0,15	1040	266	33	384	426	250	950	470	1365	1140	-	-	-	603	-	Ц	21
2с-29-6	400	10	450	25Л	Water-Steam	0,15	1040	266	33	384	426	250	950	470	1205	980	-	-	-	602	-	К	22
2с-25-6ЭГ	400	10	450	25Л	Water-Steam	0,15	1040	266	33	384	426	250	950	-	1459	1234	ГЗ-Г.2500/24	5,5	83	560	755	Э	24
2с-25-6ЭК	400	10	450	25Л	Water-Steam	0,15	1040	266	33	384	426	250	950	-	1625	1400	MODACT MON 52035.42O2N	5,5	44	560	771	Э	24
2с-25-6ЭМ	400	10	450	25Л	Water-Steam	0,15	1040	266	33	384	426	250	950	-	1675	1450	Н-Г-11	4,25	99	560	673	Э	24
2с-25-6ЭД	400	10	450	25Л	Water-Steam	0,15	1040	266	33	384	426	250	950	-	1495	1270	AUMA SA25.1-F25-380/50/3-22	4,0	90	560	695	Э	24
2с-25-6ЭН	400	10	450	25Л	Water-Steam	0,15	1040	266	33	384	426	250	950	-	1776	1545	ГИЮМ.303344.001-06	3,2	99	560	655	Э	24
850-450-ЦЗ	450	4,0*	545	15Х1М1ФЛ	Steam	0,26	1450	430	54	424	480	365	1000	-	2150	1910	-	-	-	2135	-	Ц	21
850-450-КЗ	450	4,0*	545	15Х1М1ФЛ	Steam	0,26	1450	430	54	424	480	365	1000	-	1283	1034	-	-	-	2101	-	К	22
850-450-Э	450	4,0*	545	15Х1М1ФЛ	Steam	0,26	1450	430	54	424	480	365	1000	-	2495	2150	795-Э-0-II-01	6,00	77	2047	2259	Э	31
850-450-ЭГ	450	4,0*	545	15Х1М1ФЛ	Steam	0,26	1450	430	54	424	480	365	1000	-	2339	2004	ГЗ-Г.2500/24	5,5	135	2077	2272	Э	31
850-450-ЭЧ	450	4,0*	545	15Х1М1ФЛ	Steam	0,26	1450	430	54	424	480	365	1000	-	2675	2333	ПЭМ-В66-1500-25-216М	4,0	130	2072	2170	Э	31
850-450-ЭМ	450	4,0*	545	15Х1М1ФЛ	Steam	0,26	1450	430	54	424	480	365	1000	-	2685	2348	Н-Г-12	4,25	162	2077	2242	Э	31
850-450-ЭК	450	4,0*	545	15Х1М1ФЛ	Steam	0,26	1450	430	54	424	480	365	1000	-	1610	1370	MODACT MON 52035.42O2N	5,5	72	2128	2339	Э	31
850-450-ЭД	450	4,0*	545	15Х1М1ФЛ	Steam	0,26	1450	430	54	424	480	365	1000	-	2550	2104	SA14.6/GK25.2-F25-380/50/3-22	3,3	147	2128	2264	Э	31
850-450-ЭН	450	4,0*	545	15Х1М1ФЛ	Steam	0,26	1450	430	54	424	480	365	1000	-	2580	2242	ГИЮМ.303344.001-06	5,5	132	2077	2177	Э	31

** - Pressure, P. ** - The drag coefficient is determined relative to the saddle section*

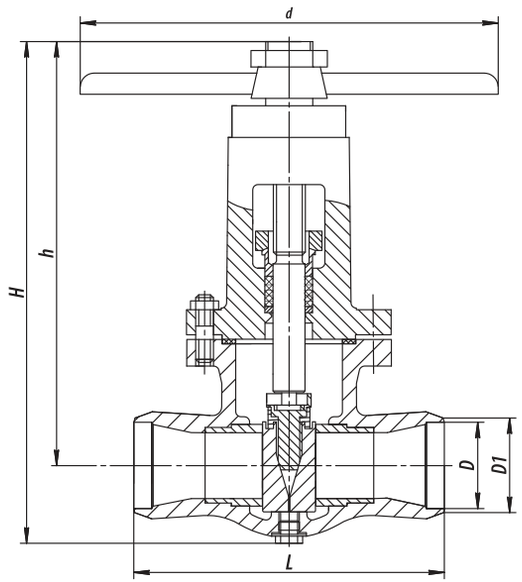

Figure 16
Gate Valve with a Handwheel

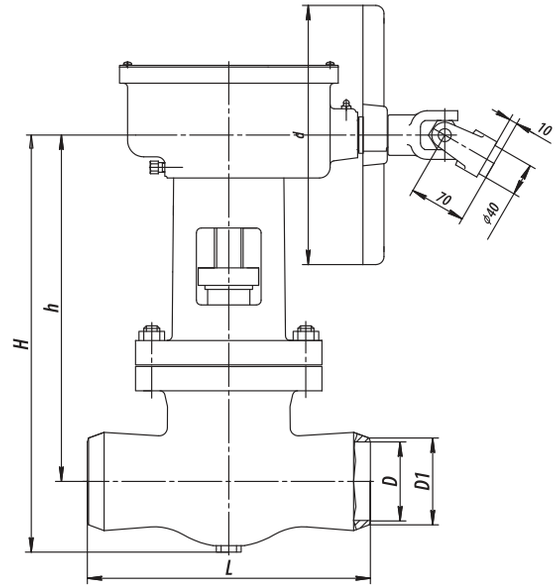

Figure 17
Gate Valve with a Bevel Gear Speed Reducer

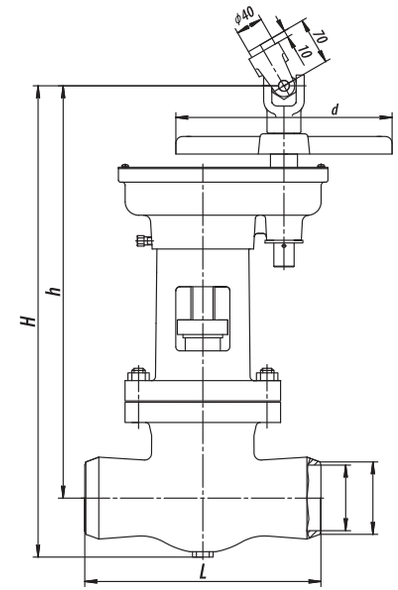

Figure 18
Gate Valve with a Parallel-Shaft Gear Reducer

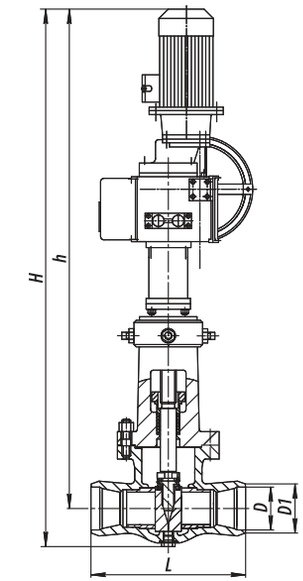

Figure 19
Gate Valve with an Electric Actuator

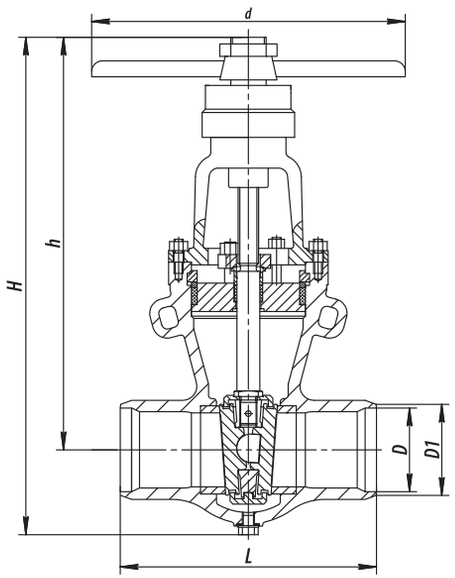

Figure 20
Gate Valve with a Handwheel

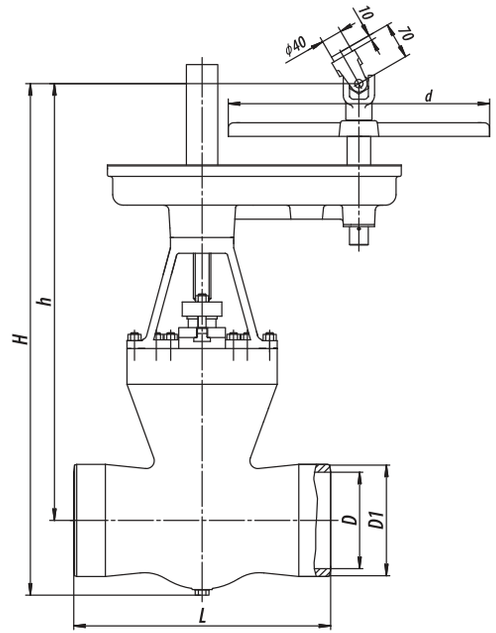

Figure 21
Gate Valve with a Parallel-Shaft Gear Reducer

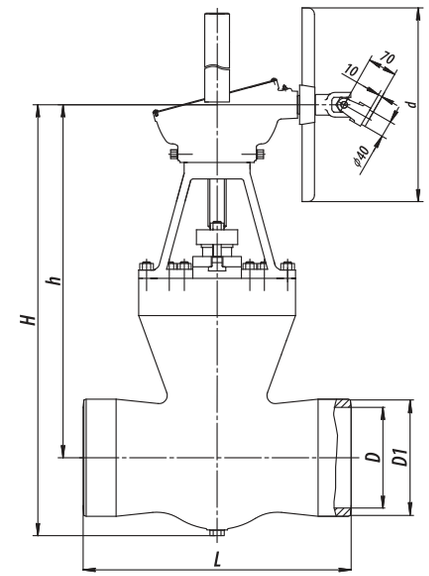

Figure 22
Gate Valve with a Bevel Gear Speed Reducer

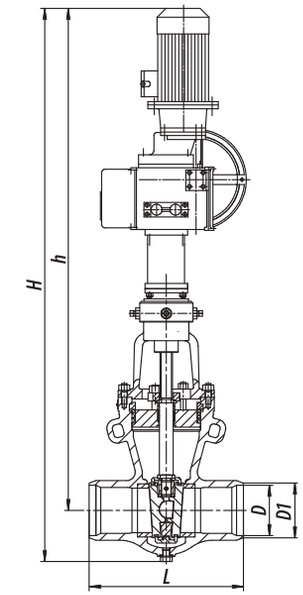

Figure 23
Gate Valve with an Electric Actuator

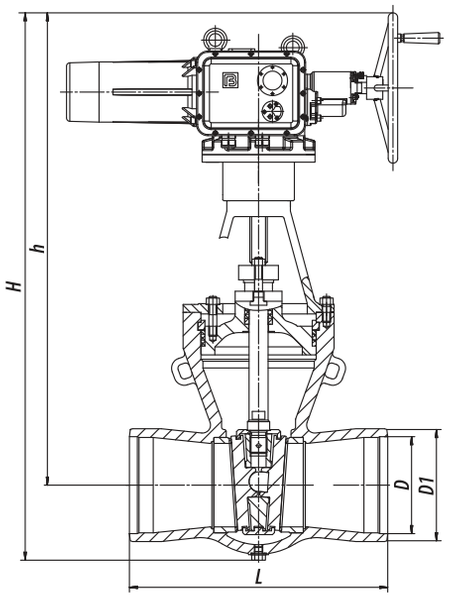

Figure 24
Gate Valve with an Electric Actuator

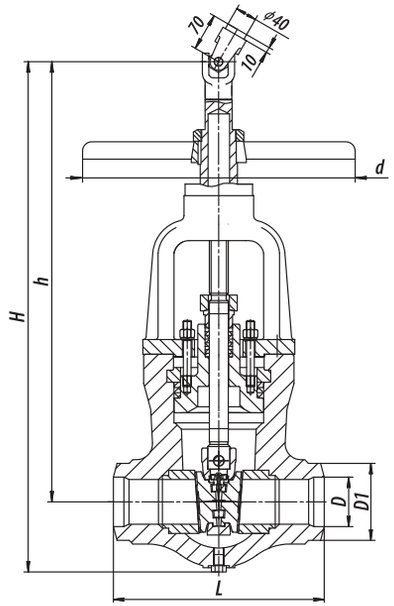

Figure 25
Gate Valve with a Handwheel

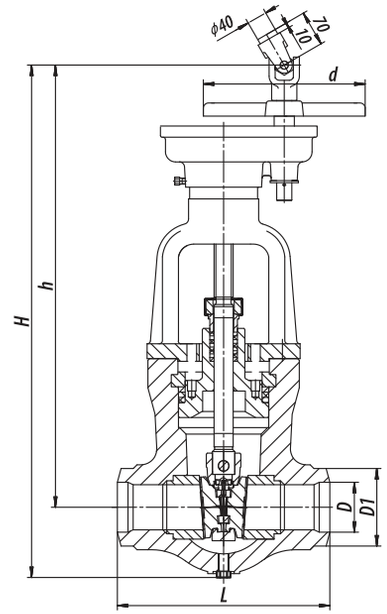

Figure 26
Gate Valve with a Parallel-Shaft Gear Reducer

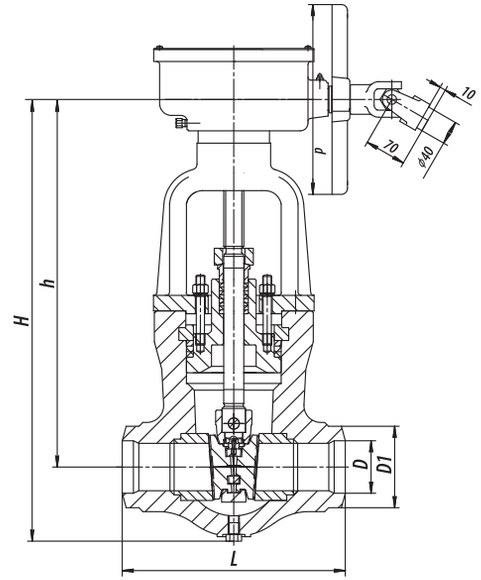

Figure 27
Gate Valve with a Bevel Gear Speed Reducer

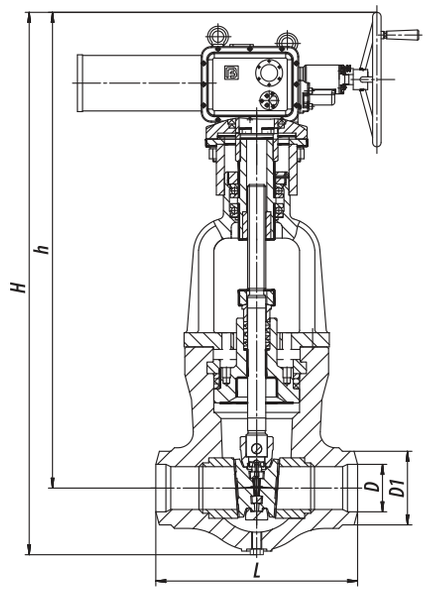

Figure 28
Gate Valve with an Electric Actuator

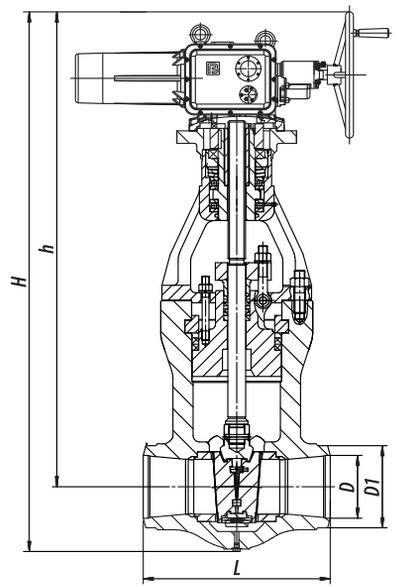

Figure 29
Gate Valve with an Electric Actuator

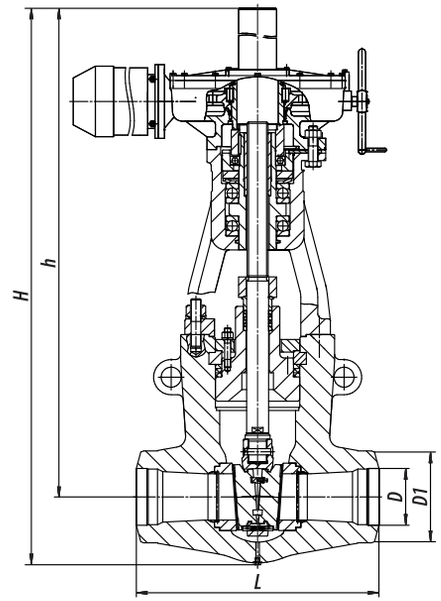

Figure 28
Gate Valve with an Electric Actuator

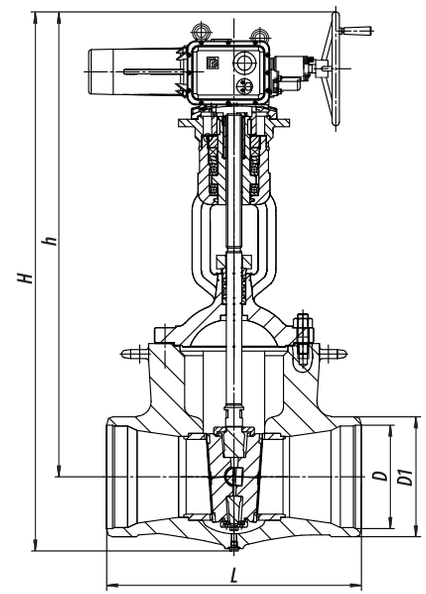

Figure 29
Gate Valve with an Electric Actuator

Float-Type Steam Trap

Purpose

The float-type steam trap is intended for automatic condensate removal from the steam pipeline or other vessels.
The opening or closing of the blocking element of the steam trap is carried out automatically with the help of a float thanks to the difference in densities of the water steam and condensate (2nd group fluid and its vapors).

Technical specifications

Pipeline connection: using a pipe with a gradient of 1:10 to the side of the steam trap.
Installation position on the pipeline: with the cover upwards.
The steam traps are designed for installation in closed premises.
Gate sealability: according to class A GOST 9544-2015.
Climatic version: У, УХЛ, Т according to GOST 15150-69.
Placement category: 3 according to GOST 15150-69.

Acceptable use

According to GOST 356-80, the **items designed for the ultimate pressure** allow their application on operating parameters within the following range:

- at PN 100 from 10 MPa, 200 °C to 3,6 MPa, 455 °C.
- at PN 63 from 6,3 MPa, 200 °C to 2,3 MPa, 455 °C.

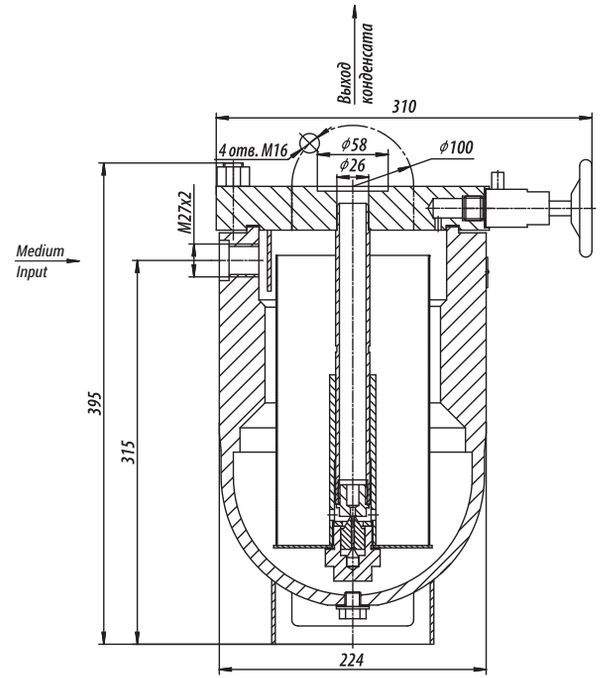

Figure 32
Float-Type Steam Trap

Identification	DN, mm	PN, MPa	Tmax of the Medium, °C	Body Material, Steel	Working Medium	Max. Kv, m^3/h	Weight, kg	Figure
5c-1-2	25	10	450	20	liquid-gas bubble mixture	0,25	52	32

Production: check valves – according to TR 2913-001-15365247-2004,
swing check valves – according to TR 3740-002-15365247-2004.

Check Valves and Swing Check Valves

Purpose

The check valves and swing check valves are used in the pipeline systems as uncontrolled, automatically operating protective devices, serving for prevention of a working medium reverse flow in emergency situations.
The check valve/swing check valve is open in working condition under the influence of the working medium flow. If there is no motion of the working medium or if the flow operates in the reversed direction, the check valve/swing check valve is closed.

Technical specifications

Structural designs: lifting and rotary valves.
Installation position of the check valve: only on horizontal pipeline sections with the medium flow direction "under the plate" so that the flow direction coincides with an arrow drawn on the body, provided that the nut (cover) is only directed upwards.
Installation position of the swing check valve: the swing check valves may be installed on horizontal sections with the cover upwards and on the vertical pipeline sections with the medium direction from the bottom upwards under the plate.
Pipeline connection: welded connection.
Gate sealability: according to class A GOST 9544-2015.
Climatic version: У, УХЛ, ХЛ, Т according to GOST 15150-69.
Placement category: 1, 2, 3 according to GOST 15150-69.

Acceptable use

According to GOST 356-80, the **items designed for the ultimate pressure** allow their application on operating parameters within the following range:

- at PN 100 from 10 MPa, 200 °C to 3,6 MPa, 455 °C.
- at PN 63 from 6,3 MPa, 200 °C to 2,3 MPa, 455 °C.

Identification	DN, mm	PN, МПа	Tmax of the Medium, °C	Body Material, Steel	Working Medium	ζ, not more than	Operating Stroke, mm	L, mm	H, mm	h, mm	D, mm	D1, mm	Item Weight, kg	Figure
3c-6-1-01	10	10	350	20	Water-Steam	7,0	7	110	103	75	10	23	1,5	33
3c-7-1-01	10	37,3*	280	20	Water	7,0	8	110	110	82	10	23	2,0	34
3c-6-1-02	15	10	350	20	Water-Steam	5,0	15	160	143	95	16	25	2,5	33
3c-6-1	20	10	350	20	Water-Steam	5,0	15	160	143	95	22	32	2,3	33
720-20-OA	20	37,3*	280	20	Water	5,0	11	160	152	104	20	32	2,8	34
720-20-OA-01	20	25*	545	12X1MΦ	Steam	5,0	11	160	152	104	20	32	2,8	34
3c-6-2	25	10	450	20	Water-Steam	5,0	15	160	143	95	26	32	2,3	33
3c-6-3	32	10	350	20	Water-Steam	6,4	20	230	162	115	32	38	3,0	33
843-40-0a-01	32	25*	545	12X1MΦ	Steam	7,0	20	220	265	180	31	57	15,4	34
843-40-0a-02	40	37,3*	280	20	Water	7,0	20	220	265	180	39	57	14,9	34
3c-6-4	50	10	350	20	Water-Steam	12,7	22	240	190	122	50	57	5,6	33
3c-7-4	50	25	350	20	Water-Steam	7,0	20	220	279	190	49	60	14,1	34
843-40-0a-03	65	23,5*	250	20	Water	7,0	25	250	285	190	58	76	17,8	34
843-40-0a-04	65	9,8*	540	12X1MΦ	Steam	7,0	25	250	285	190	62	76	17,9	34

** - Pressure, P*

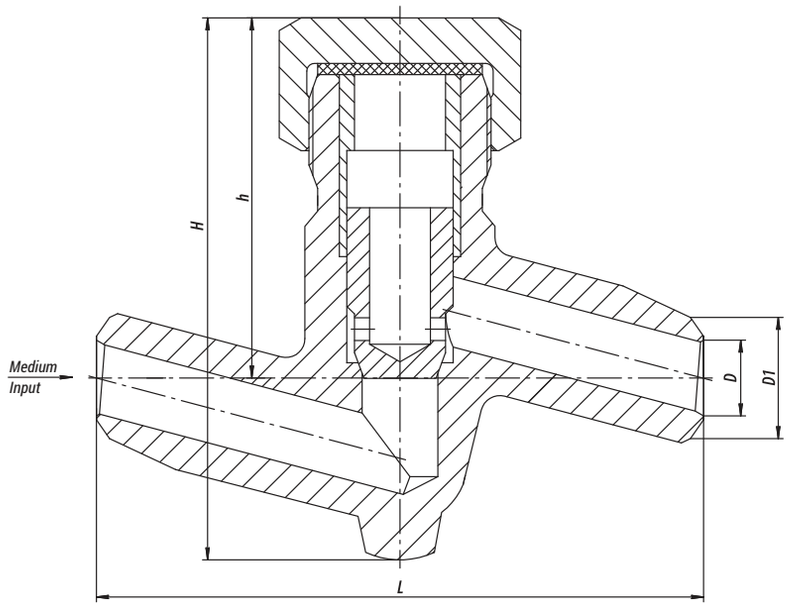

Figure 33
Check Valve

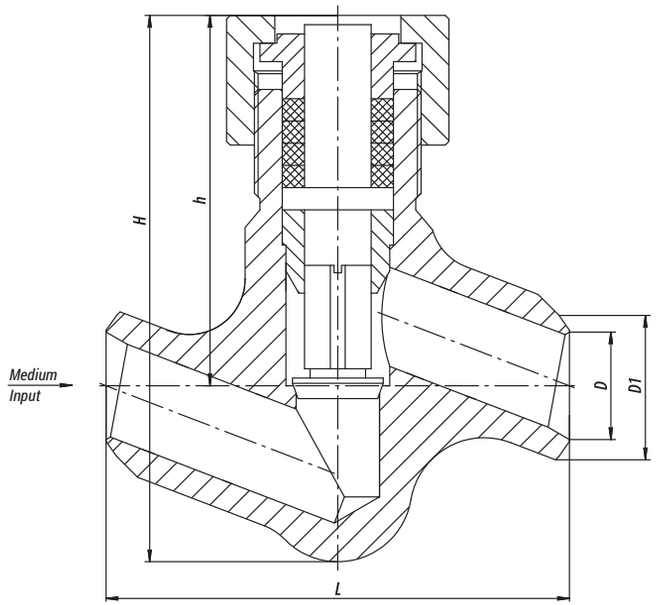

Figure 34
Check Valve

Swing Check Valves

Identification	DN, mm	PN, МПа	Tmax of the Medium, °C	Body Material, Steel	Working Medium	ζ, not more than	L, mm	H, mm	h, mm	D, mm	D1, mm	Item Weight, kg	Figure
4c-3-1	80	10	450	25Л	Water-Steam	1,1	380	281	200	77	90	35	35
4c-3-2	100	10	250	25Л	Water-Steam	1,1	430	370	268	93	108	65	35
912-100-0A	100	37,3*	280	20	Water	2,0	400	500	375	98	146	105	36
935-100-0A	100	23,5*	250	20	Water	2,0	400	500	375	109	146	105	36
935-100-0A-01	100	18,1*	215	20	Water	2,0	400	500	375	109	146	105	36
935-100-0AM	100	9,8*	540	15Х1М1Ф	Steam	2,0	400	500	375	112	146	105	36
4c-3-3	150	10	250	25Л	Water-Steam	0,9	550	435	310	142	159	109	35
912-150-0	150	37,3*	280	25Л	Water	2,0	470	475	348	144	205	160	36
935-150-0	150	18,1*	215	25Л	Water	2,0	470	475	348	166	205	160	36
935-150-0M	150	9,8*	540	15Х1М1ФЛ	Steam	2,0	470	475	348	163	205	160	36
935-175-0	175	18,1*	215	25Л	Water	2,0	550	545	400	188	230	250	36
4c-3-4	200	10	250	25Л	Water-Steam	1,0	650	535	370	195	219	184	35
912-200-06	200	37,3*	280	25Л	Water	1,0	840	755	525	203	290	1078	36
935-225-06	225	23,5*	250	25Л	Water	1,2	840	730	515	226	285	816	36
4c-3-5	250	6,3	250	25Л	Water-Steam	0,7	775	585	395	254	274	236	35
935-250-06	250	23,5*	250	25Л	Water	1,5	840	755	520	271	340	826	36
912-250-06	250	37,3*	280	25Л	Water	1,5	840	755	525	245	345	1078	36
912-250-06M	250	30,4*	510	15Х1М1ФЛ	Steam	1,5	840	755	525	249	345	1078	36
912-300-06	300	37,3*	280	25Л	Water	1,5	1350	755	760	281	400	1335	36
912-325-06	325	37,3*	280	25Л	Water	1,5	1440	755	780	330	450	1425	36
912-325-06M	325	30,4*	510	15Х1М1ФЛ	Steam	1,5	1440	755	780	330	450	1425	36
912-350-06	350	37,3*	280	25Л	Water	1,5	1500	755	765	356	480	1525	36
912-400-0	400	37,3*	280	25Л	Water	2,0	1300	1340	920	406	550	4180	36

** - Pressure, P*

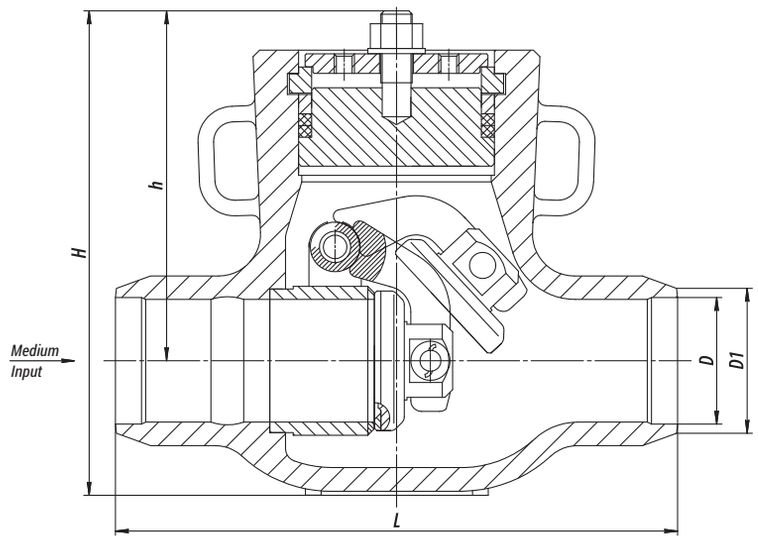

Figure 35
Check Valve

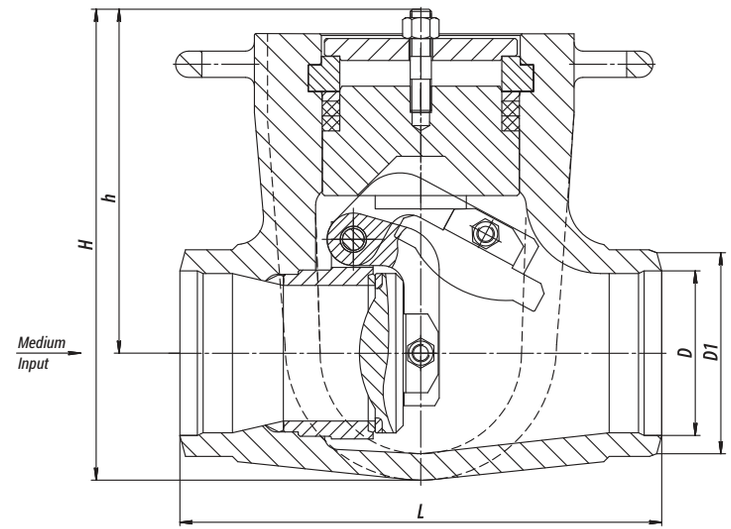

Figure 36
Check Valve

Production according to TR 3740-002-15365247-2004

Pressure Safety Valves and Pulse Valves as parts of Pilot-Operated Safety Valves (POSV)

Purpose

These safety devices are intended for provision of safe operation of the equipment and electric power plant systems by means of protection against overpressure of the working medium higher than the allowed value.
The safety devices are automatically activated and, when opening, they discharge the working medium surplus from the site protected into the atmosphere. The safety devices are represented by pilot-operated safety valves (POSV) composed of a pressure safety valve and a pulse valve.

Technical specifications

Pipeline connection:
- pulse valves – welding-on;
- pressure safety valves – welding-on and flanged connection.

Installation position: with arrangement of the shutoff device axis to a true vertical in the highest part of the site protected.
Gate sealability: according to class A GOST 9544-2015.
Climatic version: У, УХЛ, Т according to GOST 15150-69.
Placement category: 3 according to GOST 15150-69.

Acceptable use

According to GOST 356-80, the **items designed for the ultimate pressure** allow their application on operating parameters within the following range:
- at PN 10 MPa – from 10 MPa, 200 °C to 3,6 MPa, 455 °C;
- at PN 25 MPa – from 25 MPa, 200 °C to 9 MPa, 455 °C;
- at PN 6,3 MPa – from 6,3 MPa, 200 °C to 2,3 MPa, 455 °C.

The choice of the valves

The choice of the pulse and pressure safety valves, represented in our catalogue, is carried out depending on the working medium parameters and the required throughput capability.
The quantity of the pressure safety valves and their throughput capability for general-purpose power supply plants shall be chosen as per calculation according to the Regulatory Technical Documentation agreed with the Federal Service for Environmental, Technological and Nuclear Supervision of the Russian Federation.

The main pressure safety valves of medium and low pressure of series 7c, 111, 694 are intended for installation on the reduced steam pipelines, vessels and boilers. The main pressure safety valves of series 7c are completed with a pulse valve of series 8c and have a high-efficient flow path (BKZ Patent No. 2413111), enabling receipt of the required expenses at much lesser weight and size characteristics and, respectively, at almost twofold lesser cost.
Moreover, upon the customer's demand, it may be equipped with a special damping system, helping to change the valve closing speed for prevention from dynamic loads in the turbine bearings when installing the valves in the turbine shop (BKZ Patent No. 2285181). The main pressure safety valves of series 111, 694 are used with pulse valves of series 586 and 112 depending on the required medium parameters.

The main difference of high-pressure POSV of series 1202, 1203, 875, 392, 530 is provision with a pulse valve DN20 of series 586 with an electromagnetic actuator and a duplicating lever-operated one (ensuring activation in case of power failure). Such actuator is based on two electromagnets and one electromagnet of bilateral action, which provide high accuracy and timely opening and closing of the main pressure safety valve according to the pressures set at the electric-contact manometer.
The adjustment of the pulse valve in the duplicating mode on the actuation pressure is only carried out by means of choosing a place for weight installation on the lever.

Pressure Safety Valves (as parts of POSV)

Identification	DN, mm	PN, MPa	Tmax of the Medium, °C	Body Material, Steel	Working Medium	Inlet/Outlet Diameter, mm	Operating Stroke, mm	μ not less than	F, cm²	L, mm	H, mm	h, mm	d, mm	D, mm	D1, mm	d1, mm	d2, mm	d3, mm	d4, mm	d5, mm	d7, mm	d8, mm	n	n1	Item Weight, kg	Figure
875-125-0	125	25*	545	15Х1М1ФЛ	Steam	125/250	22	0,7	30,6	380	1690	720	430	500	210	313	250	-	-	120	54	41	-	12	640	42
530-150/150-0в	150	9,8*	540	15Х1М1ФЛ	Steam	150/150	20	0,7	42,4	-	-	-	-	-	-	-	-	-	-	-	-	-	-	-	424	41
392-175/95-0г	150	13,7*	560	15Х1М1ФЛ	Steam	150/200	20	0,7	42,4	-	-	-	-	-	-	-	-	-	-	-	-	-	-	-	446	40
392-175/95-0г-01	150	9,8*	540	15Х1М1ФЛ	Steam	150/200	20	0,7	42,4	-	-	-	-	-	-	-	-	-	-	-	-	-	-	-	446	40
7с-6-1	150	4	450	25Л	Steam	150/200	65	0,8	52,0	240	800	260	310	360	300	278	200	250	204	150	27	27	8	12	117	37
7с-8-1	150	4,5*	450	25Л	Steam	150/200	65	0,8	52,0	240	850	382	310	360	350	278	200	290	204	150	33	27	8	12	120	37
1203-125/175-0	125	25*	545	15Х1М1Ф	Steam	125/175	25	0,5	43,8	-	-	-	-	-	-	-	-	-	-	-	-	-	-	-	512	46
1202-150/150-0	150	9,8*	540	15Х1М1Ф	Steam	150/150	25	0,5	54,7	-	-	-	-	-	-	-	-	-	-	-	-	-	-	-	415	38
1203-150/200-0А	150	13,7*	560	15Х1М1Ф	Steam	150/200	25	0,5	54,7	-	-	-	-	-	-	-	-	-	-	-	-	-	-	-	345	39
1203-150/200-0А	150	9,8*	540	15Х1М1Ф	Steam	150/200	25	0,5	54,7	-	-	-	-	-	-	-	-	-	-	-	-	-	-	-	345	39
1029-200/250-0	200	25*	545	15Х1М1ФЛ	Steam	200/250	35	0,7	113,0	850	2090	-	-	-	-	-	-	-	-	-	-	-	-	-	1745	45
7с-6-2	200	4	450	25Л	Steam	200/250	75	0,8	127,0	290	964	350	370	425	375	335	250	320	260	200	30	30	12	12	212	37
7с-8-2	200	4,5*	450	25Л	Steam	200/250	75	0,8	127,0	290	1075	461	370	425	405	335	250	345	260	198	33	30	12	12	270	37
7с-6-3	250	2,5	450	25Л	Steam	250/300	100	0,8	253,0	330	1136	420	410	460	425	370	300	370	-	250	30	27	12	12	338	37
7с-8-3	250	4,5*	450	25Л	Steam	250/400	100	0,8	253,0	370	1097	430	550	610	500	505	400	430	313	240	39	33	12	16	466	37
111-250/400-06	250	0,8-1,2*	450	20ГСЛ	Steam	250/400	40	0,65	193,0	760	1109	846	-	-	-	-	-	-	-	-	-	-	-	-	658	43
111-250/400-06-01	250	1,3-4,3*	450	20ГСЛ	Steam	250/400	40	0,65	193,0	760	1441	1178	-	-	-	-	-	-	-	-	-	-	-	-	665	43
694-250/400-06	250	4*	545	15Х1М1ФЛ	Steam	250/400	40	0,65	193,0	760	1441	1178	-	-	-	-	-	-	-	-	-	-	-	-	717	44
7с-4-4	300	1	450	25Л	Steam	300/450	100	0,6	495,0	325	1241	425	550	590	440	520	450	400	-	300	23	23	12	16	371	37

Pulse Valves (as parts of POSV)

Identification	DN, mm	PN, MPa	Tmax of the Medium, °C	Body Material, Steel	Working Medium	Inlet/Outlet Diameter, mm	Operating Stroke, mm	Actuation Pressure		Adjustment Range of Pн Valve, MPa	Item Weight, kg	Figure
								from the Electromagnet, MPa (kg/cm)²	from the Weight, MPa (kg/cm)²			
8с-3-1-1	20	4	450	20	Steam	19/19	3	-	-	0,1 - 0,6	4,5	47
8с-3-1	20	4	450	20	Steam	19/19	3	-	-	0,25- 1,2	4,5	47
8с-3-2	20	4	450	20	Steam	19/19	3	-	-	1,2 - 2,2	4,5	47
8с-3-3	20	4	450	20	Steam	19/19	3	-	-	2,2 - 2,8	4,5	47
8с-3-4	20	4	450	20	Steam	19/19	3	-	-	2,8 - 3,6	4,5	47
8с-4-1	20	4,5*	450	20	Steam	19/19	3	-	-	3,6 - 4,5	7,2	48
586-20-ЭМ-01	20	25*	545	12Х1МФ	Steam	20/20	5	28,0 (280)	28±1 (280±10)	-	226	49
586-20-ЭМ-02	20	13,7*	560	12Х1МФ	Steam	20/20	5	15,1 (151)	15,1±0,5 (151±5)	-	206	49
586-20-ЭМ-03	20	9,8*	540	12Х1МФ	Steam	20/20	5	10,5 (105)	10,5±0,5 (105±5)	-	191	49
586-20-ЭМФ-03	20	3,9*	285	20	Steam	20/20	5	4,4 (44)	4,4±0,5 (44±5)	-	198	50
586-20-ЭМФ-04	20	4,0*	545	12Х1МФ	Steam	20/20	5	4,4 (44)	4,4±0,5 (44±5)	-	198	50
112-25х1-0	25	1,2*	450	20	Steam	25/25	6	-	-	-	31	51
112-25х1-0-01	25	3,0*	450	20	Steam	25/25	6	-	-	-	40	51
112-25х1-0-02	25	4,3*	450	20	Steam	25/25	6	-	-	-	45	51
112-25х1-0М	25	4,0*	545	12Х1МФ	Steam	25/25	6	-	-	-	45	51

** - Pressure, P*

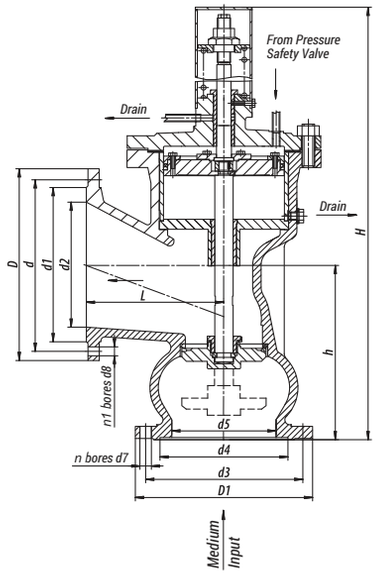

Figure 37
Pressure Safety Valve

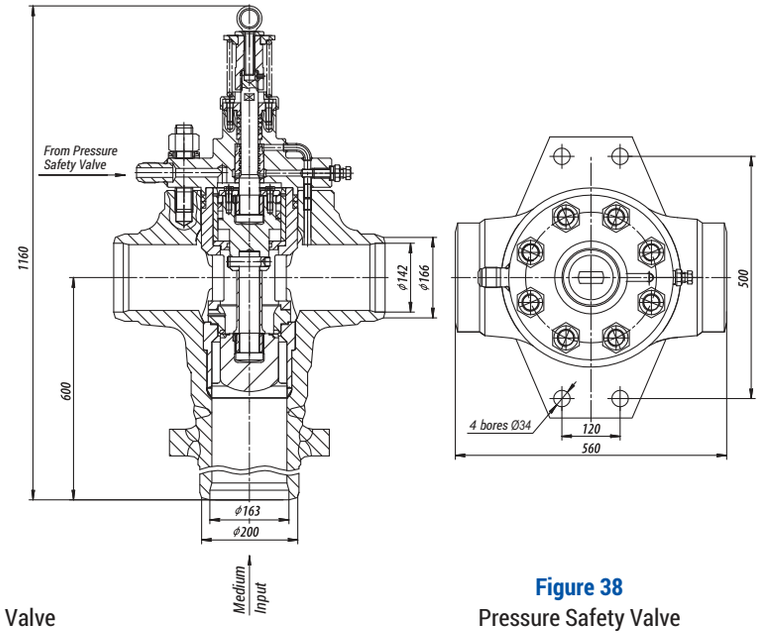

Figure 38
Pressure Safety Valve

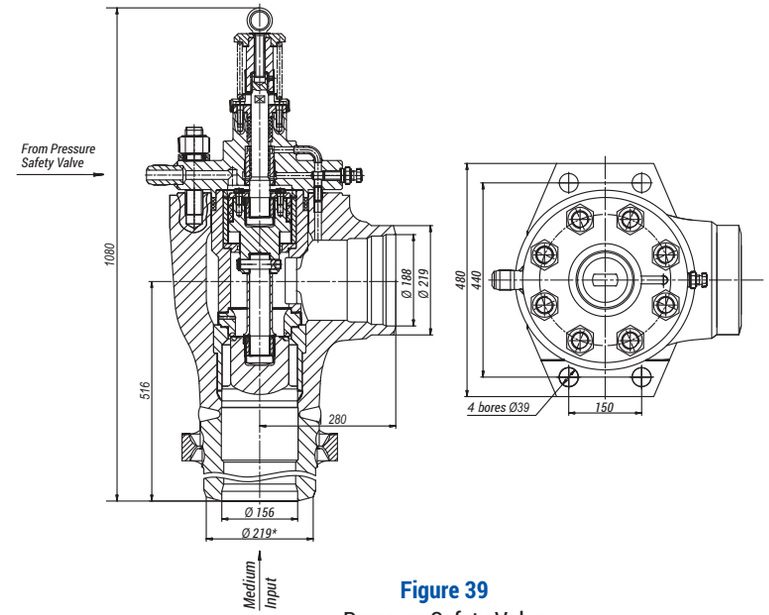

Figure 39
Pressure Safety Valve

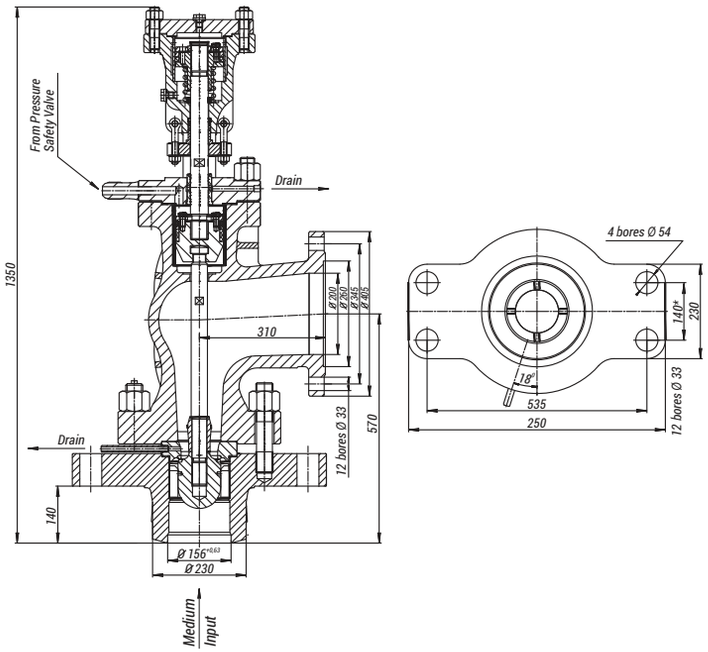

Figure 40
Pressure Safety Valve

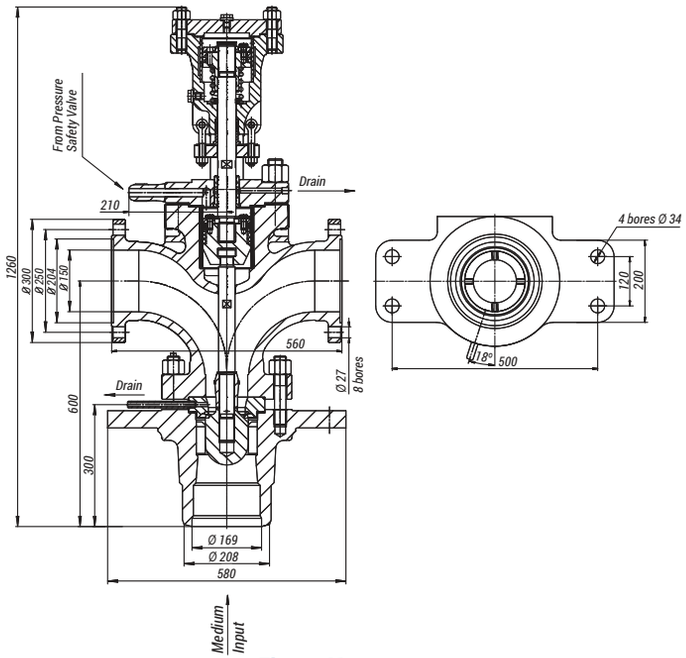

Figure 41
Pressure Safety Valve

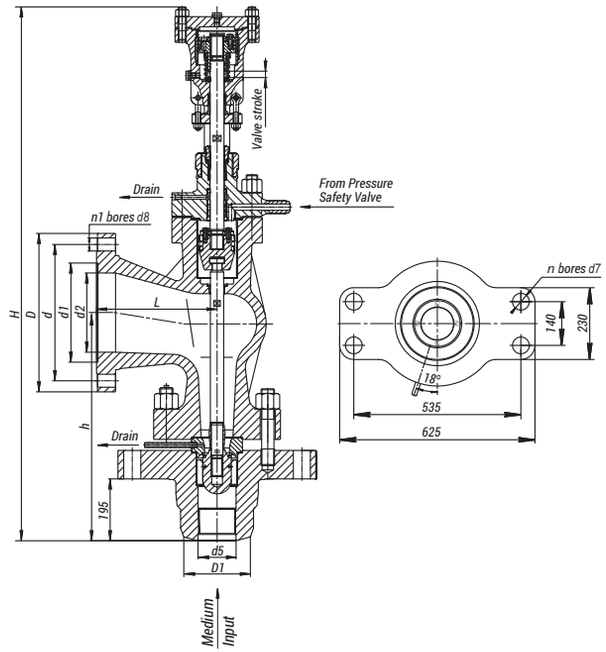

Figure 42
Pressure Safety Valve

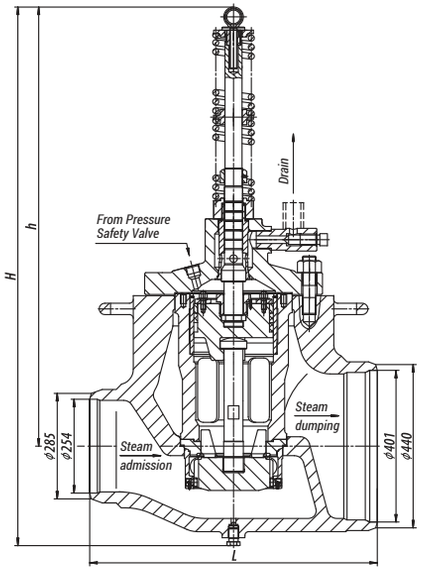

Figure 43
Pressure Safety Valve

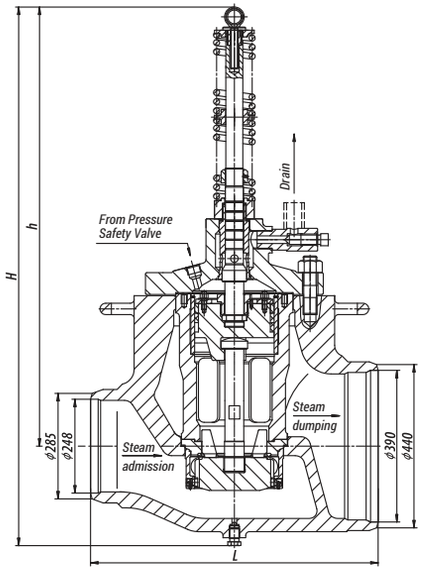

Figure 44
Pressure Safety Valve

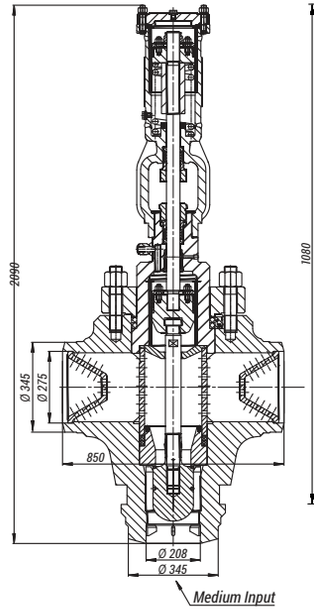

Figure 45
Pressure Safety Valve

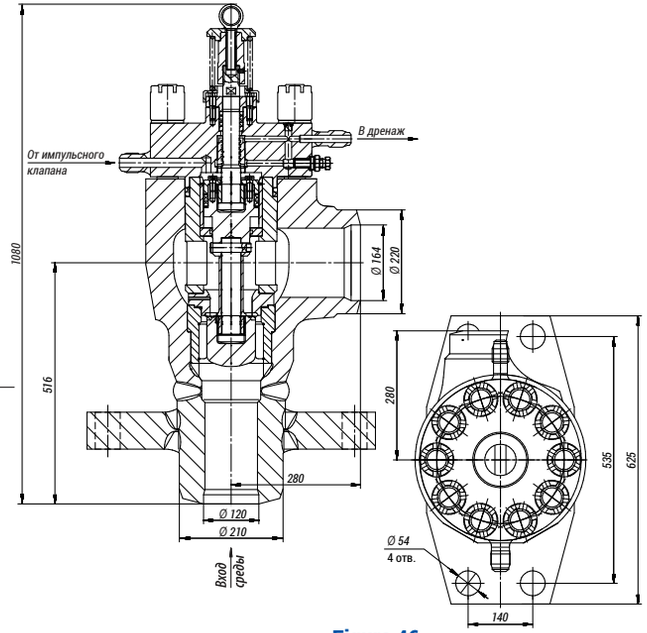

Figure 46
Pressure Safety Valve

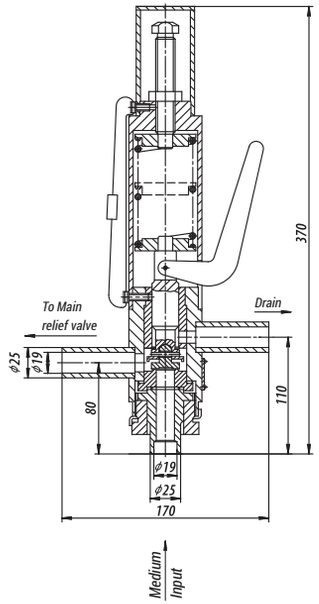

Figure 47
Pulse Valve

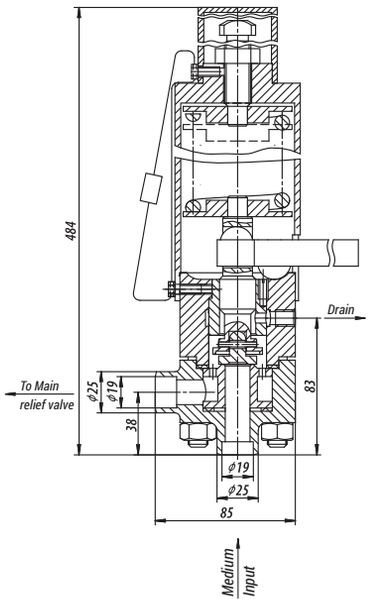

Figure 48
Pulse Valve

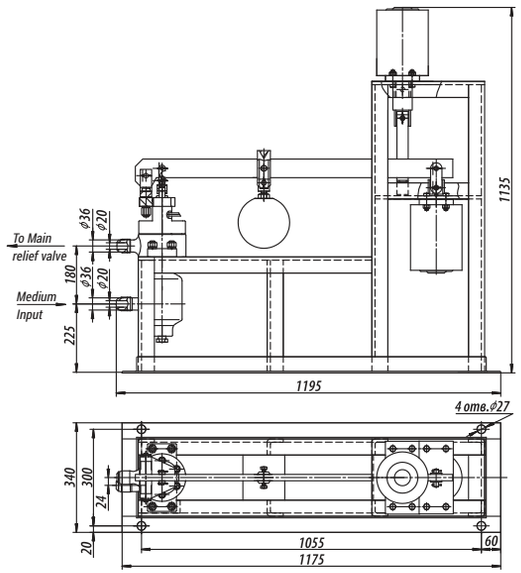

Figure 49
Pulse Valve

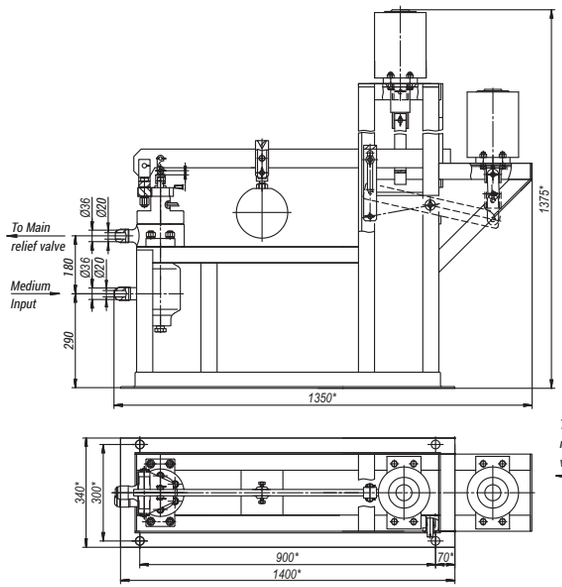

Figure 50
Pulse Valve

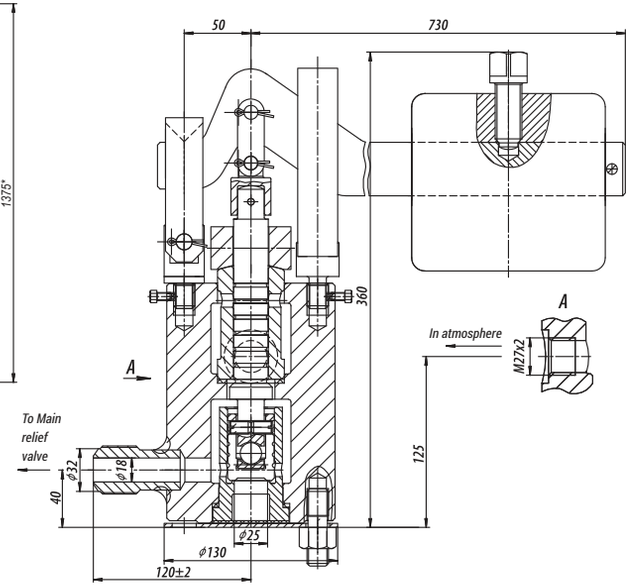

Figure 51
Pulse Valve

Production according to TR 3740-002-15365247-2004

Pressure Safety Valves of Series 788

Purpose

The pressure safety valve DN 400/600 of series 788 is a direct-acting protective device.
It is installed on pipelines of reduced and cooled steam after the pressure-reducing and desuperheating stations.

Technical specifications

Valve body material: carbon steel.
Pipeline connection: flanged connection.
Installation position: on horizontal pipeline sections in the position of the rod upwards in the places convenient for maintenance.
The valve body has foot supports for the valve mounting to the building structure.
Gate sealability: according to class A GOST 9544-2015.
Climatic version: У, УХЛ, Т according to GOST 15150-69.
Placement category: 3 according to GOST 15150-69.

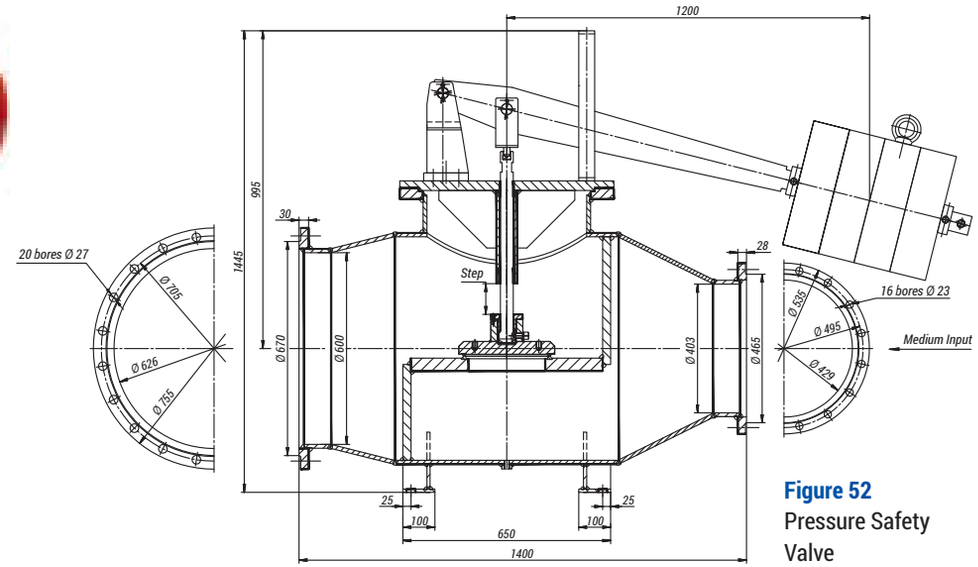

Figure 52
Pressure Safety Valve

Identification	DN, mm	Pp, MPa	Tmax of the Medium, °C	Body Material, Steel	Working Medium	Inlet/Outlet Diameter, mm	Operating Stroke, mm	μ, not less than	Maximum Steam Rate, t/h	The Smallest Passage Area, cm²	Item Weight, kg	Figure
788-400/600-0-01	400	0,25	127	20	Steam	400/600	100	0,5	35	452	980	52
788-400/600-0-02	400	0,35	139	20	Steam	400/600	100	0,5	45	452	1082	52
788-400/600-0-03	400	0,45	148	20	Steam	400/600	100	0,5	55	452	1183	52

Production according to TR 2913-001-15365247-2004

Direct-Acting Pressure Safety Valves

Purpose

The direct-acting pressure safety valves are intended for the equipment protection against overpressure of the working medium higher than the allowed value.

The valve is closed in case of steam pressure reduction in the site protected up to a definite value of the working pressure.

Pipeline connection:

- threaded-end connection;
- flanged connection.

The connection is designed for loads from the valve weight and reactive forces appearing in case of the valve activation.

Installation position: vertically in the highest part of the site protected.
Climatic version: У, УХЛ, ХЛ, Т according to GOST 15150-69.
Placement category: 2, 3 according to GOST 15150-69.

The choice of the valve

The choice of the pressure safety valve from the product line, represented in the catalogue, is carried out depending on the working medium parameters in the site protected and the required throughput capability.

The quantity of the pressure safety valves and their throughput capability for general-purpose power supply plants shall be chosen as per calculation according to the Regulatory Technical Documentation agreed with the Federal Service for Environmental, Technological and Nuclear Supervision of the Russian Federation.

Identification	DN, mm	PN, MPa	Tmax of the Medium, °C	Adjustment Range of Pн Valve, MPa	Body Material, Steel	Working Medium	Operating Stroke, mm	μ not less than	F, cm²	L, mm	H, mm	h, mm	h1, mm	D1, mm	D2, mm	Inlet/Outlet Diameter, mm	d1, mm	d2, mm	d3, mm	d4, mm	d5, mm	d6, mm	d7, mm	d8, mm	n1	n1	Item Weight, kg	Figure
15c-1-1	25	1,0	200	0,8-1,0	20	Steam	6±1,5	0,7	2,5	126	302	50	70	M39x2	M48x2	25/40	27	36	-	-	-	-	-	-	-	-	3,7	53
17c-1-2	32	1,0	250	0,6±0,15	20	Steam	8+1,5	0,6	6,1	220	339	60	100	M48x2	M60x2	32/50	36	48	-	-	-	-	-	-	-	-	4,5	55
15c-2-2	32	1,6	250	1,1-1,5	20	Steam	8+1,5	0,7	6,1	260	349	100	100	135	140	32/50	32	50	100	110	-	-	18	14	4	4	7,0	54
17c-1-3	40	1,0	250	0,6±0,15	20	Steam	8+1,5	0,7	6,1	220	339	60	100	M52x2	M60x2	40/50	40	48	-	-	-	-	-	-	-	-	4,9	56
17c-2-3	40	1,0	250	0,6±0,15	20	Steam	8+1,5	0,7	6,1	225	343	65	100	145	140	40/50	40	48	110	110	-	-	18	14	4	4	7,8	57
T-31MC-1	50	6,3	425	3,5-4,5	20	Steam	12+3	0,65	18,1	366	686	150	130	175	215	50/100	50	98	135	180	102	88	23	18	4	8	48,0	58
T-31MC-2	50	6,3	425	1,8-2,8	20	Steam	12+3	0,65	18,1	366	686	150	130	175	215	50/100	50	98	135	180	102	88	23	18	4	8	47,0	58
T-31MC-3	50	6,3	425	0,7-1,5	20	Steam	12+3	0,65	18,1	366	686	150	130	175	215	50/100	50	98	135	180	102	88	23	18	4	8	44,0	58
T-131MC	50	10	450	3,5-4,5	20	Steam	12+3	0,65	18,1	366	686	150	130	195	215	50/100	50	98	145	180	102	88	26	18	4	8	48,0	58
T-32MC-1	80	6,3	425	3,5-4,5	20	Steam	15+3	0,65	30,2	416	740	200	160	210	280	80/150	80	147	170	240	133	121	23	23	8	8	76,0	58
T-32MC-2	80	6,3	425	1,8-2,8	20	Steam	15+3	0,65	30,2	416	740	200	160	210	280	80/150	80	147	170	240	133	121	23	23	8	8	72,0	58
T-32MC-3	80	6,3	425	0,7-1,5	20	Steam	15+3	0,65	30,2	416	740	200	160	210	280	80/150	80	147	170	240	133	121	23	23	8	8	71,0	58
T-132MC	80	10	450	3,5-4,5	20	Steam	15+3	0,65	30,2	416	740	200	160	230	280	80/150	80	147	180	240	133	121	26	23	8	8	76,0	58

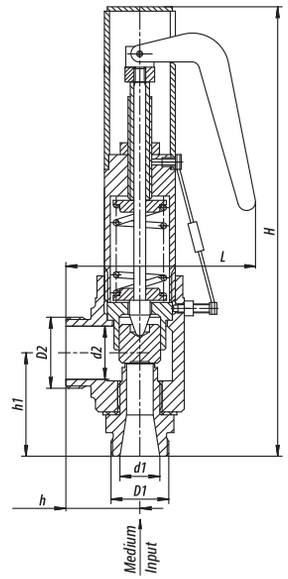

Figure 53
Direct-Acting Pressure
Safety Valve

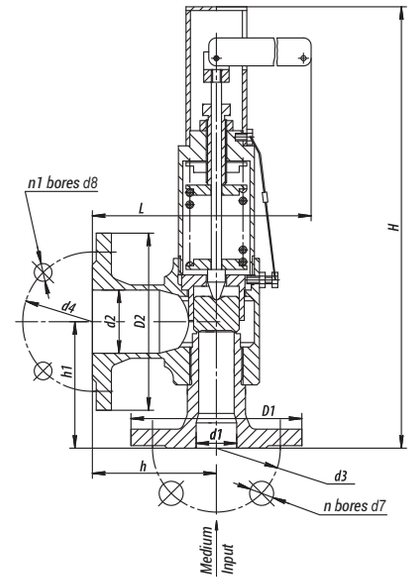

Figure 54
Direct-Acting Pressure
Safety Valve

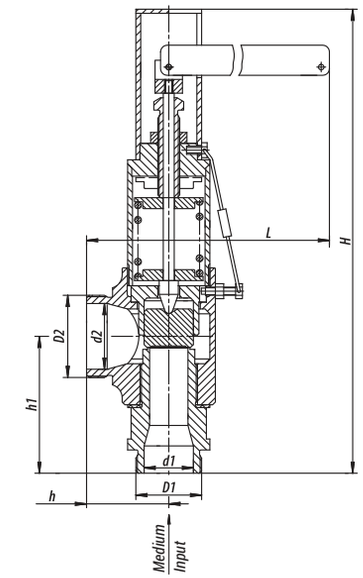

Figure 55
Direct-Acting Pressure
Safety Valve

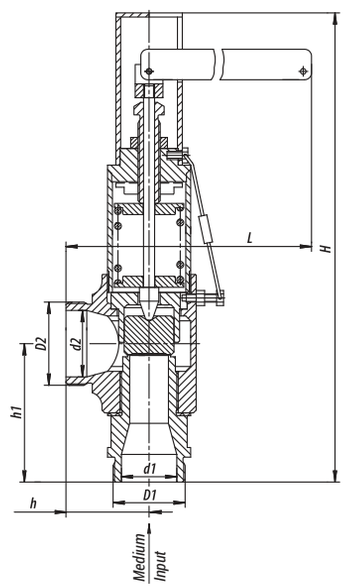

Figure 56
Direct-Acting Pressure
Safety Valve

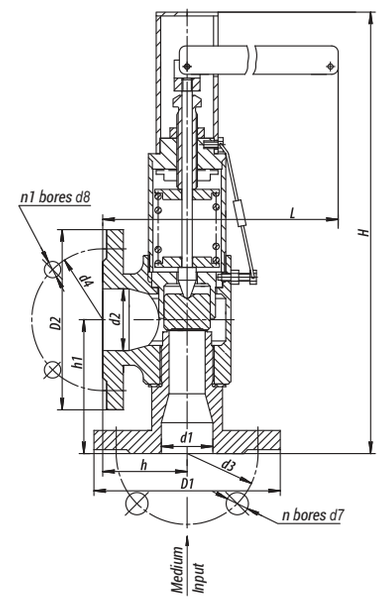

Figure 57
Direct-Acting Pressure
Safety Valve

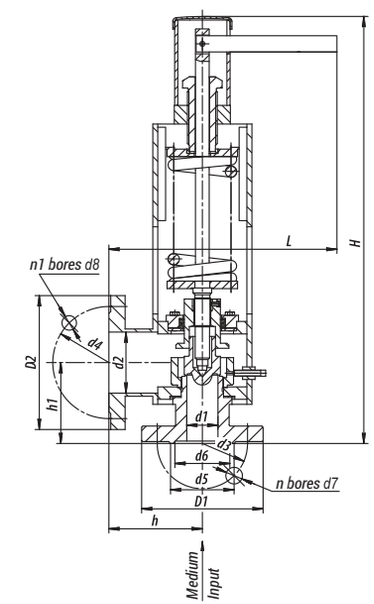

Figure 58
Direct-Acting Pressure
Safety Valve

Production according to TR 3740-002-15365247-2004

Control Rotary Valves of Type 6c

Purpose

The valves of type 6c are intended for the control of the working medium flow or pressure.

The medium flow through the valve is controlled by means of changing the passage area, which is achieved when turning the spool with regard to the sleeve (seat).

- The maximum turning angle of the spool is 90°.
- The controlled passage sections in the valve are performed in form of rectangular windows in the spool and seat.

The valves are not used as shutoff devices.

Technical specifications

Pipeline connection: welded connection.

Installation position: on horizontal and vertical pipeline sections in the places convenient for maintenance and repair.

Spindle position:

- for the actuator of single-turn electric actuator type (МЭО) – horizontal and vertical position;
- for the actuator of single-turn electric flanged actuator type (МЭОФ) – vertical position with the actuator upwards.

Working medium supply direction: set according to the arrow drawn on the body.

Climatic version: У, УХЛ, ХЛ, Т according to GOST 15150-69.

Placement category: 1, 2, 3 according to GOST 15150-69.

Control

The control of the control valves of type 6c is carried out with the help of:

- a built-in electric actuator of single-turn electric flanged actuator type;
- an electric actuator of single-turn electric actuator type manufactured by ABS Automation, Cheboksary;
- built-in quarter-turn electric actuators SAR (AUMA) etc. or quarter-turn pneumatic actuators FESTO, VALBIA, Air Torgue, ROTORK etc., chosen considering the working medium pressure and air pressure.

The allowed pressure differential is as follows:

- for superheated steam – $\Delta P = Pp - 0{,}546\ Pp$;
- for water – not more than $\Delta P = 1{,}0$ MPa (10 kgf/cm^2).

The throughput capability depending on the spool turning angle is shown in the diagrams.

Acceptable use

According to GOST 356-80, the **items designed for the ultimate pressure** allow their application on operating parameters within the following range:

- at PN 100 MPa – from 10 MPa, 200 °C to 3,6 MPa, 455 °C;
- at PN 63 MPa – from 6,3 MPa, 200 °C to 2,3 MPa, 455 °C.

Identification	DN, mm	PN, MPa	Tmax of the Medium, °C	Body Material, Steel	Working Medium	Мкр., N•m, not more than	Full Stroke . Rotation Number	μ, not less than	Max. Kv, m/hour³	F, cm²	Inlet/ Outlet Diameter, mm	D, mm	D1, mm	D2, mm	D3, mm	L, mm	H, mm	h, mm	Electric Actuator Identification	N, kW	t of the Stroke, sec.	Weight without Electric Actuator, kg	Full Weight, kg	Figure	Diagram
6c-12-1-1	50	6,3	425	25Л	Water-Steam	100	0,25	0,46	42,0	18,0	50/50	50	50	60	60	350	560	396	МЭО-250/25-0,25У-99К	0,25	25	67	94,5	59	1
6c-12-1-1Э	50	6,3	425	25Л	Water-Steam	100	0,25	0,46	42,0	18,0	50/50	50	50	60	60	350	820	665	МЭОФ-250/25-0,25У-99К	0,25	25	67	93,0	60	1
6c-12-1-2	50	6,3	425	25Л	Water-Steam	100	0,25	0,46	25,5	11,0	50/50	50	50	60	60	350	560	396	МЭО-250/25-0,25У-99К	0,25	25	67	94,5	59	1
6c-12-1-2Э	50	6,3	425	25Л	Water-Steam	100	0,25	0,46	25,5	11,0	50/50	50	50	60	60	350	820	665	МЭОФ-250/25-0,25У-99К	0,25	25	67	93,0	60	1
6c-13-1	80	10	450	25Л	Water-Steam	100	0,25	0,80	54,8	13,6	80/80	77	77	90	90	430	645	435	МЭО-250/25-0,25У-99К	0,25	25	123	150,5	59	2
6c-13-1Э	80	10	450	25Л	Water-Steam	100	0,25	0,80	54,8	13,6	80/80	77	77	90	90	430	950	700	МЭОФ-250/25-0,25У-99К	0,25	25	123	149,0	60	2
6c-13-2	100	10	450	25Л	Water-Steam	100	0,25	0,74	71,0	19,5	100/100	93	93	108	108	430	635	345	МЭО-250/25-0,25У-99К	0,25	25	112	139,5	59	2
6c-13-2Э	100	10	450	25Л	Water-Steam	100	0,25	0,74	71,0	19,5	100/100	93	93	108	108	430	940	700	МЭОФ-250/25-0,25У-99К	0,25	25	113	139,0	60	2
6c-13-3	150	10	450	25Л	Steam	150	0,25	0,64	175,0	54,9	150/200	142	203	159	224	450	715	464	МЭО-250/25-0,25У-99К	0,25	25	147	174,5	59	3
6c-13-3Э	150	10	450	25Л	Steam	150	0,25	0,64	175,0	54,9	150/200	142	203	159	224	450	1020	730	МЭОФ-250/25-0,25У-99К	0,25	25	145	173,0	60	3
6c-13-4	200	10	450	25Л	Steam	150	0,25	0,48	198,0	82,4	200/250	195	254	219	280	500	730	488	МЭО-250/25-0,25У-99К	0,25	25	162	189,5	59	3
6c-13-4Э	200	10	450	25Л	Steam	150	0,25	0,48	198,0	82,4	200/250	195	254	219	280	500	1005	755	МЭОФ-250/25-0,25У-99К	0,25	25	163	191,0	60	3
6c-13-5	250	10	450	25Л	Steam	150	0,25	0,50	370,0	147,1	250/300	244	303	273	333	600	800	528	МЭО-250/25-0,25У-99К	0,25	25	232	259,5	59	4
6c-13-5Э	250	10	450	25Л	Steam	150	0,25	0,50	370,0	147,1	250/300	244	303	273	333	600	1055	793	МЭОФ-250/25-0,25У-99К	0,25	25	234	262,0	60	4
6c-12-4	300	6,3	425	25Л	Steam	150	0,25	0,45	388,0	170,6	300/350	303	354	333	386	590	820	532	МЭО-250/25-0,25У-99К	0,25	25	261	288,5	59	5
6c-12-4Э	300	6,3	425	25Л	Steam	150	0,25	0,45	388,0	170,6	300/350	303	354	333	386	590	1090	805	МЭОФ-250/25-0,25У-99К	0,25	25	260	288,0	60	5
6c-12-4-1	300	6,3	425	25Л	Steam	150	0,25	0,50	545,0	218,0	300/400	303	401	333	430	590	800	528	МЭО-250/25-0,25У-99К	0,25	25	240	267,5	59	4
6c-12-4-1Э	300	6,3	425	25Л	Steam	150	0,25	0,50	545,0	218,0	300/400	303	401	333	430	590	1074	793	МЭОФ-250/25-0,25У-99К	0,25	25	233	261,0	60	4

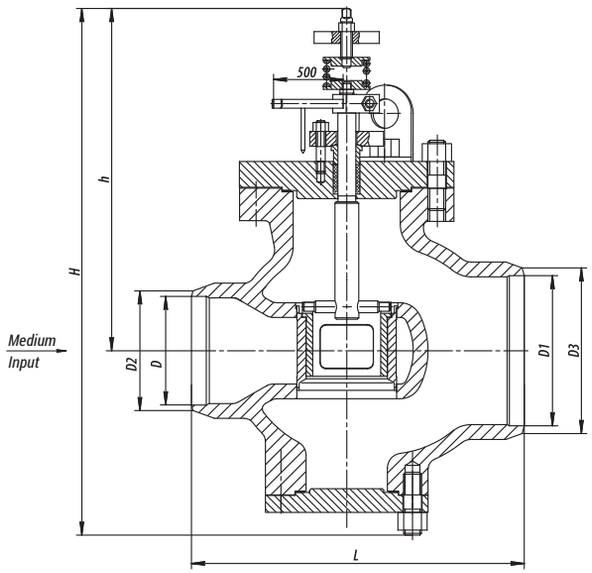

Figure 59
Control Valve

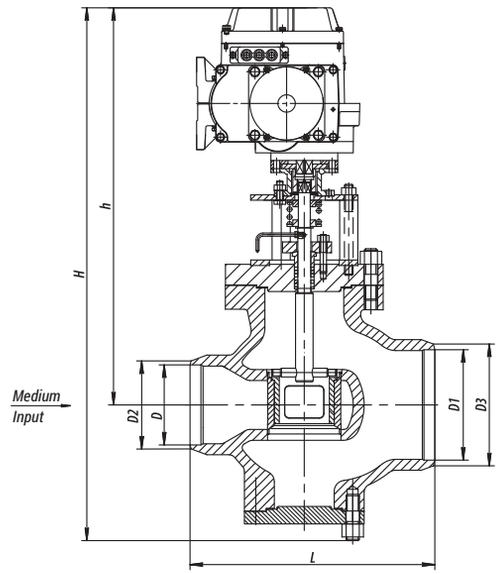

Figure 60
Control Valve with
a Built-in Electric Actuator

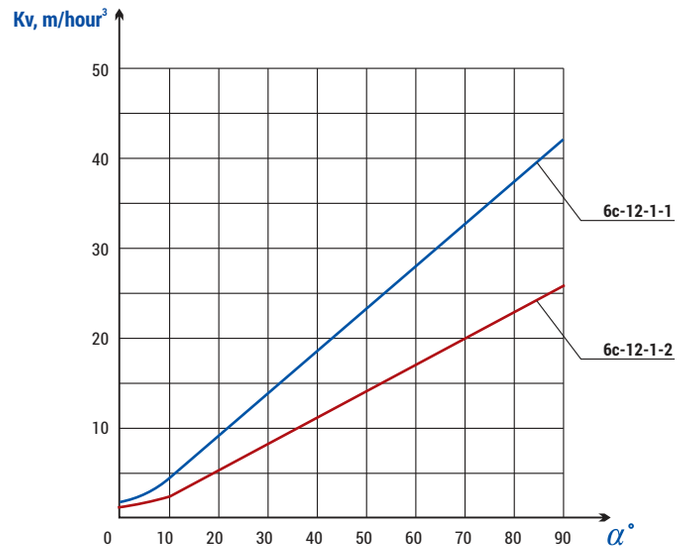

Diagram 1

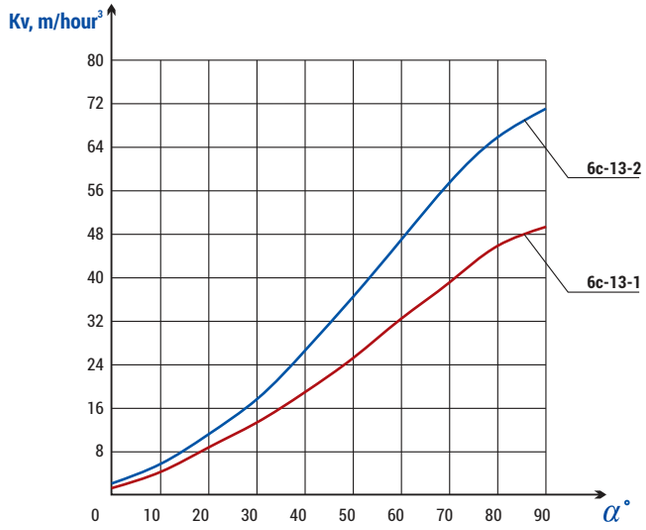

Diagram 2

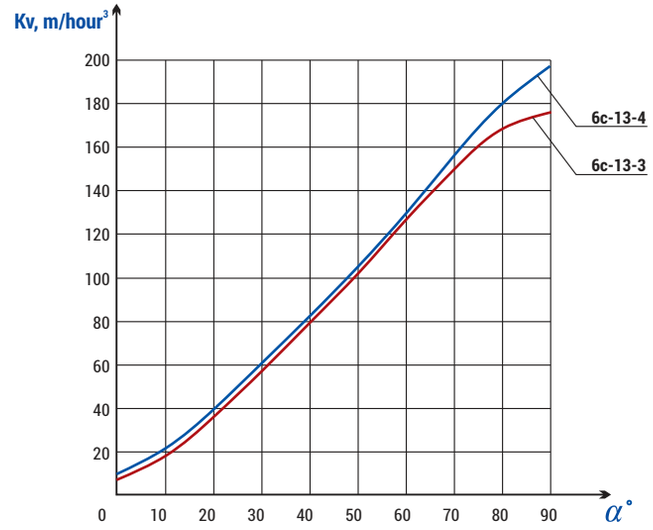

Diagram 3

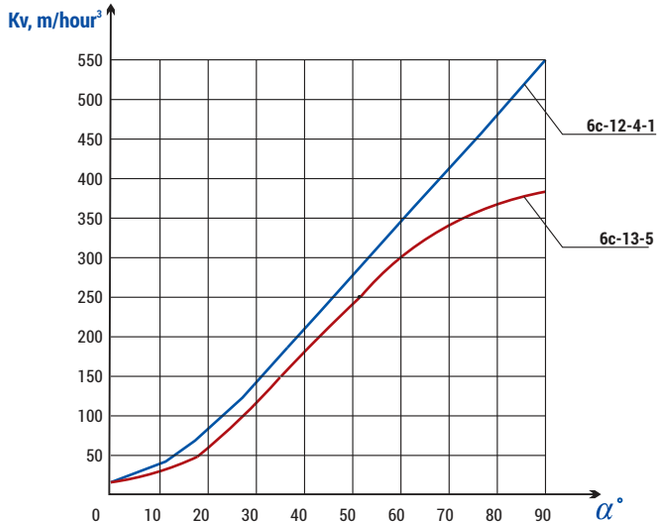

Diagram 4

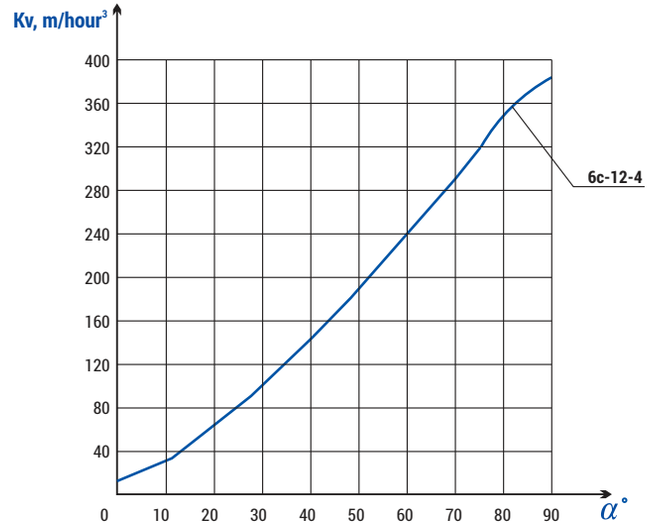

Diagram 5

Production according to TR 2913-001-15365247-2004

Control Needle Valves

Purpose

The control needle valves are used as fluid flow regulators.

- The provision of smooth control within the limits of the rated throughput capability is achieved with the help of the valve needle form.
- The seat has reinforced hard-facing of increased hardness which is resistant to erosive and corrosive wear.

They are not used as shutoff devices.

Valve classification according to the actuator type

According to the actuator type of the working body and control method, the control needle valves are divided into the following types:

- **Lever-operated control needle valves.** The valve control is carried out on a remote basis (automatically) with actuators of single-turn electric actuator type (МЭО) through the lever. The allowed pressure differential on the valve shall not exceed 1 Mpa.
- **Control needle valves.** The valve control is carried out with a handwheel or an actuator with a current position sensor of electric multi-turn actuator types (ПЭМ) (ABS ZEIM Automation), SAR (AUMA) or linear pneumatic actuators FESTO, VALBIA, AIR Torque, ROTORK etc., chosen considering the working medium pressure and air pressure. The valves equipped with actuators shall be only installed on horizontal pipeline sections with the actuator position upwards.
- **Control angle valves.** The valves are controlled with a built-in multi-turn electric actuator with a current position sensor of electric multi-turn actuator / electric multi-turn mechanism types (ПЭМ/МЭМ) (ABS ZEIM Automation), SAR (AUMA) etc. or linear pneumatic actuators of electric multi-turn actuator types (МЭП) (ABS ZEIM Automation), REGADA etc., chosen considering the working medium pressure.

Technical specifications

Installation place: as a rule, the valves are installed on the cooling water injection pipelines in DS, PRDS, FRPRDS and industrial pipelines.
Installation requirements: the valves are designed for outdoor installation and in closed premises with the ambient temperature up to +70 C.
The valves equipped with built-in actuators shall be only installed on horizontal pipeline sections with the actuator position upwards.
Pipeline connection: welded connection.
Climatic version: У, УХЛ, ХЛ, Т according to GOST 15150-69.
Placement category: 1, 2, 3 according to GOST 15150-69.
Depending on the lifting height of the valve needle, the throughput capability is shown in the diagrams.

Acceptable use

According to GOST 356-80, the **valves designed for the ultimate pressure** allow their application on operating parameters within the following range:

- at PN 100 MPa – from 10 MPa, 200 °C to 3,6 MPa, 455 °C;
- at PN 63 MPa – from 6,3 MPa, 200 °C to 2,3 MPa, 455 °C;
- at PN 25 MPa – from 25 MPa, 200 °C to 9 MPa, 455 °C.

> The control needle valves Dn10 – Dn65 may be manufactured with an easily replaceable seat from titanium or nickel alloy upon the customer's demand.

Identification	DN, mm	PN, MP	Tmax of the Medium, °C	Body Material, Steel	Working Medium	Max. Pressure Differential, MPa	Мкр., N•m, not more than	Operating Stroke, mm	Max. Kv, m/hour³	Max. Steam Flow at Critical Pressure Differential, t/h	F, cm²	D, mm	D1, mm	L, mm	H, mm	h, mm	h1, mm	Electric Actuator Identification	N, kW	t of the Stroke, sec.	Weight without Electric Actuator, kg	Full Weight, kg	Figure	Diagram
9c-5-1	10	10	350	20	Water-Steam	1,0	54	10	0,4	-	0,085	10	16	110	214	184	280	МЭО-100/25-0,25У-99К	0,17	5,0	3,8	31,8	61	6
9c-5-1-2	10	10	350	20	Water-Steam	1,0	54	15	1,5	-	0,6	10	16	110	219	189	280	МЭО-100/25-0,25У-99К	0,17	7,5	3,8	31,8	61	6
9c-5-2	20	10	350	20	Water-Steam	1,0	157	20	2,1	-	0,3	22	32	160	281	235	300	МЭО-250/25-0,25У-99К	0,25	10,0	6,2	34,0	61	6
9c-5-2-2	20	10	350	20	Water-Steam	1,0	157	22	4,4	-	1,5	22	32	160	293	247	300	МЭО-250/25-0,25У-99К	0,25	10,0	6,2	34,0	61	6
9c-5-2-2M	20	25	350	20	Water-Steam	1,0	340	22	4,4	-	1,5	22	32	160	293	247	300	МЭО-630/25-0,25У-92К	0,20	10,0	6,8	80,6	61	6
9c-4-2	32	10	425	20	Water-Steam	1,0	117	22	3,8	-	0,67	32	38	230	316	269	300	МЭО-250/25-0,25У-99К	0,25	11,0	7,2	35,0	61	6
1193-32-P	32	25*	545	12Х1МФ	Steam	Critical	4078**	25	-	39,8	7,5	60	31	220	575	490	420	МЭО-1600/25-0,25У-87К	0,20	10,0	32,0	106,0	63	8
815-40-Рв	40	25*	545	12Х1МФ	Steam	Critical	2350**	44	-	25,0	3,2	31	60	190	497	-	90	МЭО-630/25-0,25У-92К	0,20	12,4	19,5	94,0	64	10
815-40-Рв-01	40	15,7*	545	12Х1МФ	Steam	Critical	2350**	44	-	30,0	6,5	31	60	190	497	-	90	МЭО-630/25-0,25У-92К	0,20	12,4	19,5	94,0	64	10
1195-50-P	50	13,7*	560	12Х1МФ	Steam	Critical	2222**	25	-	32,9	7,5	50	78	250	595	500	455	МЭО-1600/25-0,25У-87К	0,20	12,4	34,1	169,0	63	8
811-50-Рв	50	13,7*	560	12Х1МФ	Steam	Critical	1350**	44	-	15,0	4	50	75	190	440	-	90	МЭО-630/25-0,25У-92К	0,20	12,4	18,0	92,0	64	10
9c-3-3-2	50	6,3	425	20	Water-Steam	1,0	82	30	5,75	-	0,9	50	57	240	264	196	300	МЭО-100/25-0,25У-99К	0,17	17,0	7,7	35,7	62	7
9c-3-3-4	50	6,3	425	20	Water-Steam	1,0	82	30	10,25		2,39	50	57	240	264	196	300	МЭО-100/25-0,25У-99К	0,17	17,0	7,7	35,7	62	7
814-50-Pa	50	37,3*	280	20	Water	10	2170**	44	4,0	-	0,98	43	65	190	508	-	88	МЭО-630/25-0,25У-92К	0,20	12,0	19,7	93,7	64	12
814-50-Pa-01	50	37,3*	280	20	Water	10	2170**	44	5,0	-	1,5	43	65	190	508	-	88	МЭО-630/25-0,25У-92К	0,20	12,0	19,7	93,7	64	12
814-50-Pa-02	50	37,3*	280	20	Water	10	2170**	44	7,9	-	1,96	43	65	190	508	-	88	МЭО-630/25-0,25У-92К	0,20	12,0	19,7	93,7	64	12
814-50-Pa-03	50	37,3*	280	20	Water	10	2170**	44	4,1	-	1,02	43	65	190	508	-	88	МЭО-630/25-0,25У-92К	0,20	12,0	19,7	93,7	64	12
814-50-Pa-04	50	37,3*	280	20	Water	10	2170**	44	8,3	-	2,06	43	65	190	508	-	88	МЭО-630/25-0,25У-92К	0,20	12,0	19,7	93,7	64	12
814-50-Pa-05	50	37,3*	280	20	Water	10	2170**	44	16,7	-	4,14	43	65	190	508	-	88	МЭО-630/25-0,25У-92К	0,20	12,0	19,7	93,7	64	12
808-65-Рв	65	9,8*	540	12Х1МФ	Steam	Critical	2200**	48	-	28,5	10	62	76	190	520	-	70	МЭО-630/25-0,25У-92К	0,20	12,4	21,4	95,4	64	11
808-65-Рв-01	65	9,8*	540	12Х1МФ	Steam	Critical	2200**	48	-	12,0	4,76	62	76	190	520	-	70	МЭО-630/25-0,25У-92К	0,20	12,4	21,4	95,4	64	11
9c-5-5-2	65	25	350	20	Water	1,0	630	30	10,25		2,4	58	76	250	595	500	460	МЭО-630/25-0,25У-92К	0,20	12,5	40,0	114,0	63	9
1197-65-P	65	9,8*	540	12Х1МФ	Steam	Critical	630	30	-	23,77	7,5	62	76	250	595	500	460	МЭО-630/25-0,25У-92К	0,20	10,0	40,0	114,0	63	8
1198-65-P	65	23,5*	250	20	Water	1,0	630	30	30	-	7,5	58	76	250	595	500	460	МЭО-1600/25-0,25У-87К	0,20	10,0	40,0	114,0	63	8

** - Pressure, P*
*** - lever force, H*

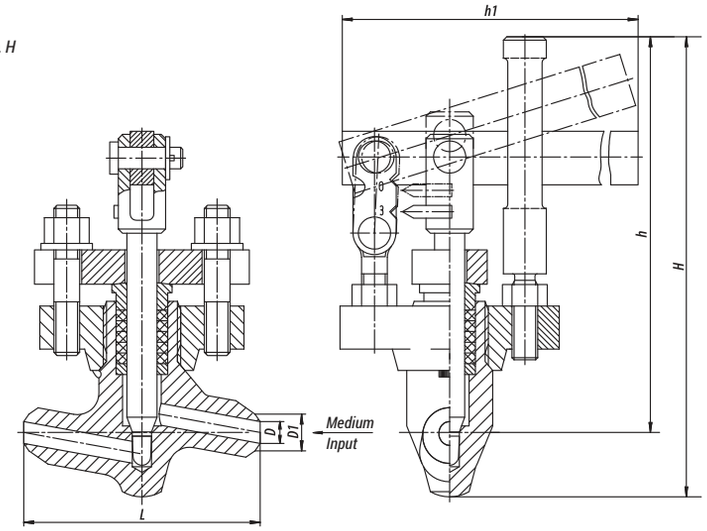

Figure 61
Control Valve

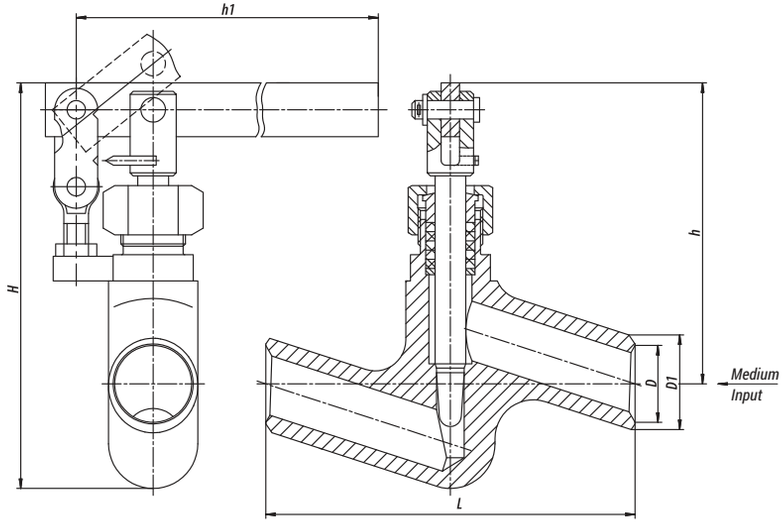

Figure 62
Control Valve

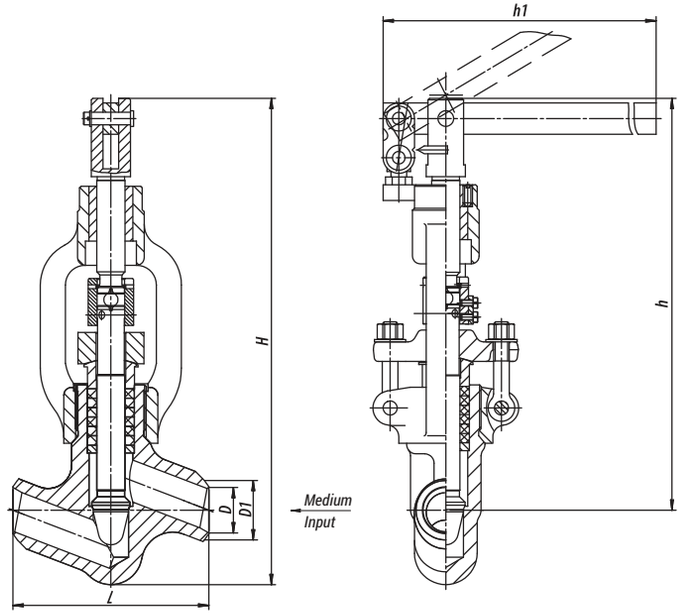

Figure 60
Control Valve

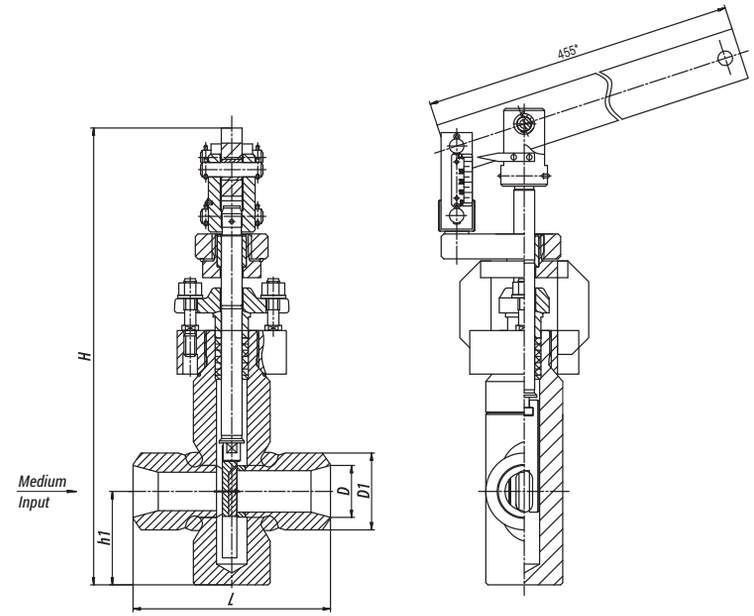

Figure 61
Control Valve

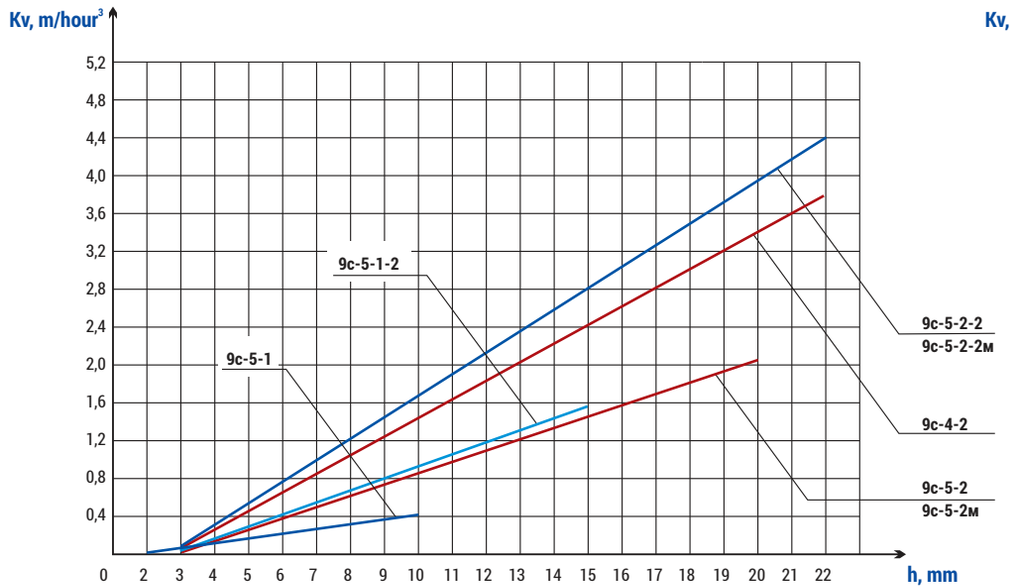

Diagram 6

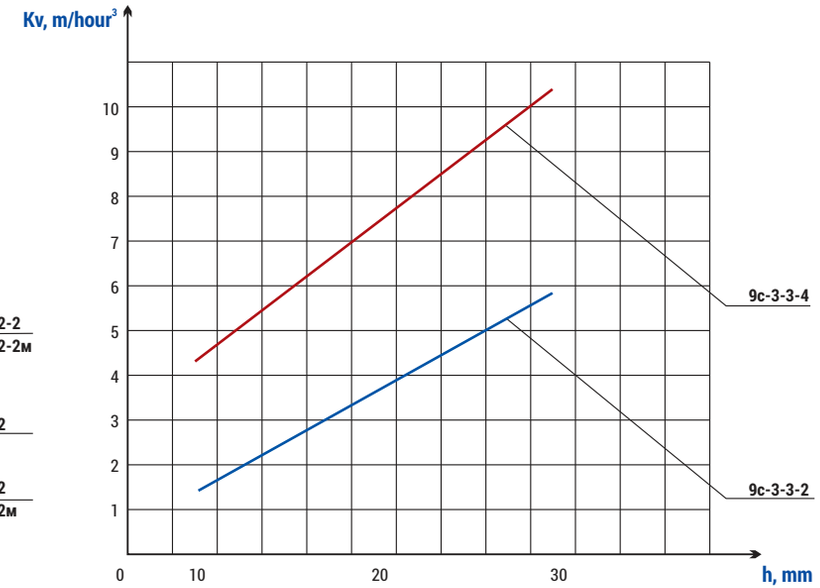

Diagram 7

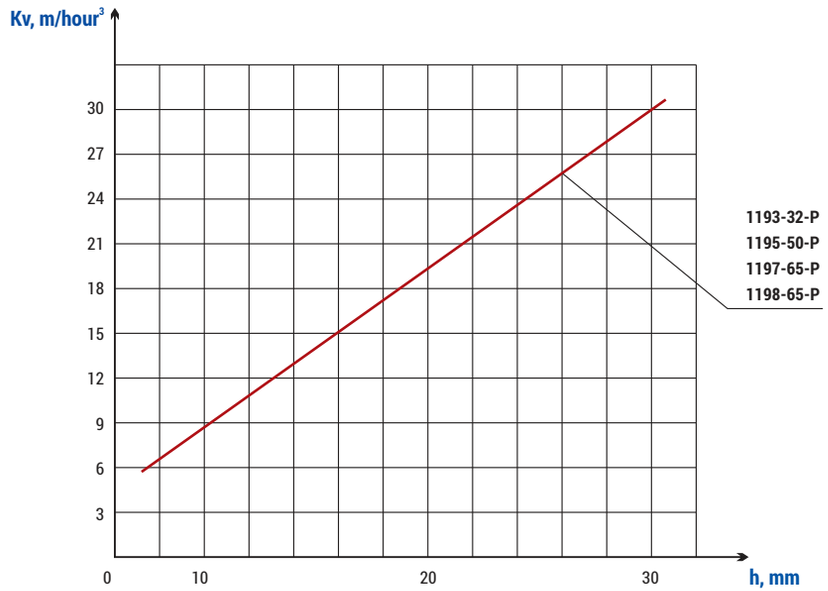

Diagram 8

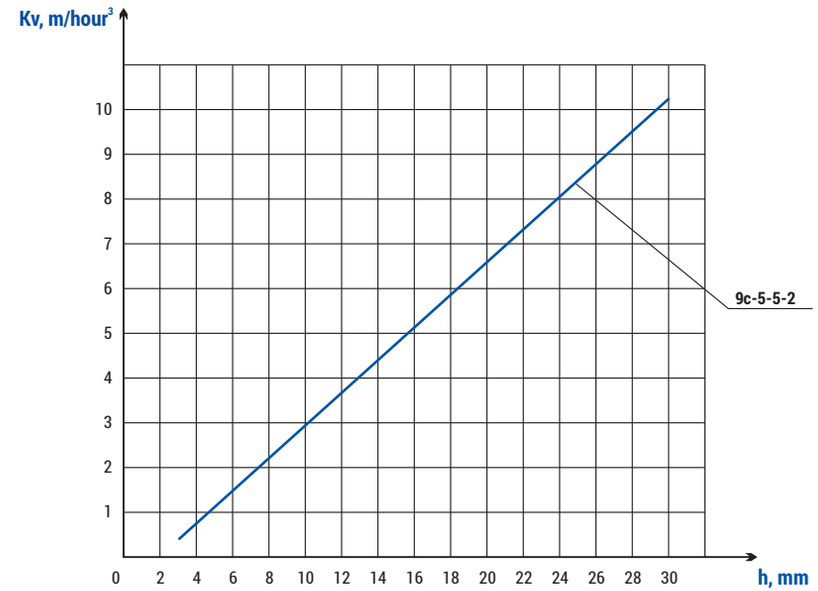

Diagram 9

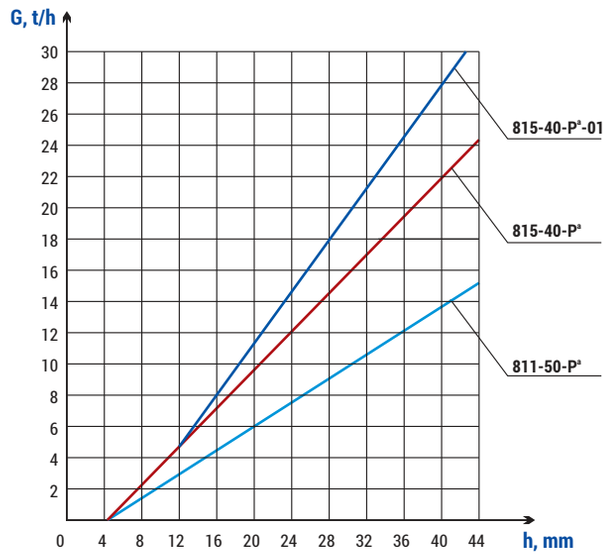

Diagram 10

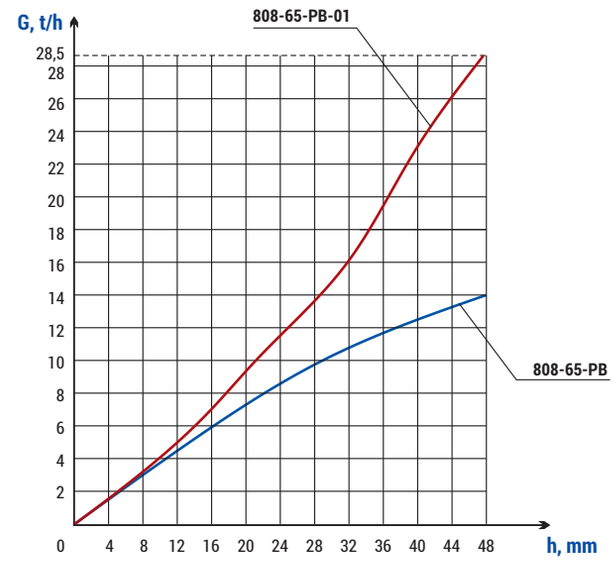

Diagram 11

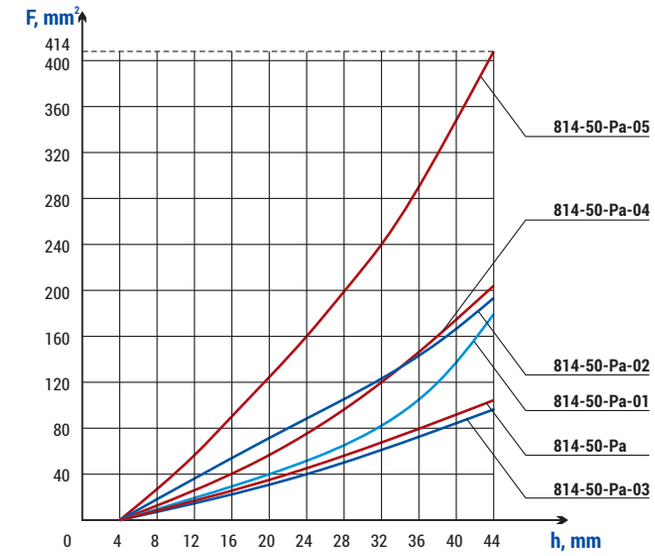

Diagram 12

Identification	DN, mm	PN, MPa	Tmax of the Medium, °C	Body Material, Steel	Working Medium	Max. Pressure Differential, MPa	Мкр., Nm, not more than	Operating Stroke, mm	Max. Kv, m/hour³	Full Stroke Rotation Number	F, cm²	d, mm	D, mm	D1, mm	L, mm	H, mm	h, mm	Electric Actuator Identification	N, kW	t of the Stroke, sec.	Weight without Electric Actuator, kg	Full Weight, kg	Figure	Diagram
10с-1М	10	10	450	20	Water-Steam	1,0	80	10	0,4	2,5	0,085	150	10	16	110	230	202	-	-	-	3,1	-	65	13
10с-5-1	10	25	350	20	Water-Steam	1,0	80	10	0,4	2,5	0,085	150	10	16	110	230	202	-	-	-	3,1	-	65	13
10с-5-1Э	10	25	350	20	Water-Steam	1,0	80	10	0,4	2,5	0,085	-	10	16	110	472	444	ПЭМ-А32У	0,18	12,5	4,0	27,0	66	13
10с-5-1-2	10	25	350	20	Water-Steam	1,0	80	15	1,5	3,5	0,6	150	10	16	110	230	202	-	-	-	3,1	-	65	13
10с-6-1	10	16,5*	560	12Х1МФ	Steam	Critical	80	15	1,5	3,5	0,6	150	10	16	110	230	202	-	-	-	3,1	-	65	13
584-10-0	10	37,3*	280	20	Water	1,0	80	15	1,5	3,5	0,6	150	10	16	110	230	202	-	-	-	3,1	-	65	13
597-10-0а	10	25*	545	12Х1МФ	Steam	Critical	80	15	1,5	3,5	0,6	150	10	16	110	230	202	-	-	-	3,1	-	65	13
10с-5-2	20	25	350	20	Water-Steam	1,0	80	20	2,1	5	0,3	200	22	32	160	309	263	-	-	-	5,6	-	65	14
10с-5-2Э	20	25	350	20	Water-Steam	1,0	80	20	2,1	5	0,3	-	22	32	160	821	775	ПЭМ-А29У	0,18	25	10,1	33,1	66	14
10с-5-2-2	20	25	350	20	Water-Steam	1,0	80	22	4,4	5,5	1,75	200	22	32	160	309	263	-	-	-	5,6	-	65	14
10с-5-2-2Э	20	25	350	20	Water-Steam	1,0	80	22	4,4	5,5	1,75	-	22	32	160	821	775	ПЭМ-А29У	0,18	27	10,1	33,1	66	14
1032-20-0	20	37,3*	280	20	Water	1,0	80	22	4,4	5,5	1,75	200	20	32	160	309	263	-	-	-	5,6	-	65	15
10с-7-3Э	20	37,3*	280	20	Water	1,0	80	22	4,4	5,5	1,75	-	20	32	160	821	775	ПЭМ-А29У	0,18	27	10,1	33,1	66	15
1031-20-0	20	25*	545	12Х1МФ	Steam	Critical	80	22	4,4	5,5	1,75	200	20	32	160	309	263	-	-	-	5,6	-	65	15
10с-8-3Э	20	25*	545	12Х1МФ	Steam	Critical	80	22	4,4	5,5	1,75	-	20	32	160	821	775	ПЭМ-А29У	0,18	27	10,1	33,1	66	15
10с-6-2	20	16,5*	560	12Х1МФ	Steam	Critical	80	22	4,4	5,5	1,75	200	22	32	160	309	263	-	-	-	5,6	-	65	14
10с-6-2Э	20	16,5*	560	12Х1МФ	Steam	Critical	80	22	4,4	5,5	1,75	-	22	32	160	821	775	ПЭМ-А29У	0,18	27	10,1	33,1	66	14
10с-5-2-1	25	10	450	20	Water-Steam	1,0	80	22	4,4	5,5	1,75	200	26	32	160	309	263	-	-	-	5,6	-	65	14
10с-5-2-1Э	25	10	450	20	Water-Steam	1,0	80	22	4,4	5,5	1,75	-	26	32	160	821	775	ПЭМ-А29У	0,18	27	10,1	33,1	66	14
10с-5-3	32	10	450	20	Water-Steam	1,0	80	22	3,8	5,5	0,67	200	32	38	230	320	273	-	-	-	6,1	-	65	14
10с-5-3Э	32	10	450	20	Water-Steam	1,0	80	22	3,8	5,5	0,67	-	32	38	230	821	775	ПЭМ-А29У	0,18	27	10,8	33,8	66	14
10с-8-4	32	25*	545	12Х1МФ	Steam	Critical	250	33	3,8	5,5	0,67	320	31	57	220	557	468	-	-	-	40,0	-	65	17
10с-5-4-1	50	25	350	20	Water-Steam	1,0	250	30	5,75	5	0,9	320	49	60	220	557	468	-	-	-	40,0	-	65	16
10с-5-4-1Э	50	25	350	20	Water-Steam	1,0	250	30	5,75	5	0,9	-	49	60	220	753	664	МЭП-25000/100-50-У-99	0,3	60	38,0	63,0	67	16
10с-5-4-2	50	25	350	20	Water-Steam	1,0	250	30	10,25	5	2,39	320	49	60	220	557	468	-	-	-	40,0	-	65	15
10с-5-4-2Э	50	25	350	20	Water-Steam	1,0	250	30	10,25	5	2,39	-	49	60	220	753	664	МЭП-25000/100-50-У-99	0,3	60	38,0	63,0	67	15
10с-3-3	50	6,3	425	20	Water-Steam	1,0	80	25	5,75	6,25	0,9	200	50	57	240	348	280	-	-	-	9,0	-	65	16
10с-3-3Э	50	6,3	425	20	Water-Steam	1,0	80	25	5,75	6,25	0,9	-	50	57	240	821	775	ПЭМ-А29У	0,18	30	12,4	35,4	66	16
10с-3-3-4	50	6,3	425	20	Water-Steam	1,0	80	25	10,25	6,25	2,39	200	50	57	240	348	280	-	-	-	9,0	-	65	15
10с-3-3-4Э	50	6,3	425	20	Water-Steam	1,0	80	25	10,25	6,25	2,39	-	50	57	240	821	775	ПЭМ-А29У	0,18	30	12,4	35,4	66	15
10с-5-4Э	50	17*	350	20	Water	1,0	250	30	29,6	5	8,4	-	49	57	220	753	664	МЭП-25000/100-50-У-99	0,3	60	38,0	63,0	67	19
976-65-М	65	23,5*	250	20	Water	1,0	250	35	22,6	6	6,4	320	58	76	250	628	533	-	-	-	44,0	-	65	18
976-65-Э	65	23,5*	250	20	Water	1,0	250	35	44,5	6	12,6	-	58	76	250	1287	1198	ПЭМ-Б0У	0,55	19	44,0	85,0	66	18

* - Pressure, P

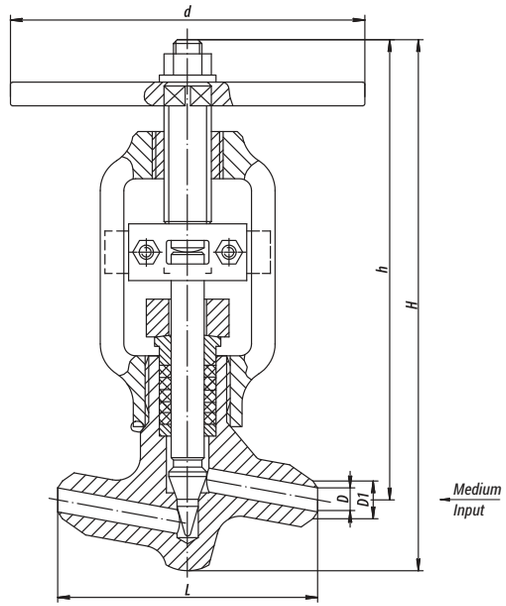

Figure 65
Control Valve with
a Handwheel

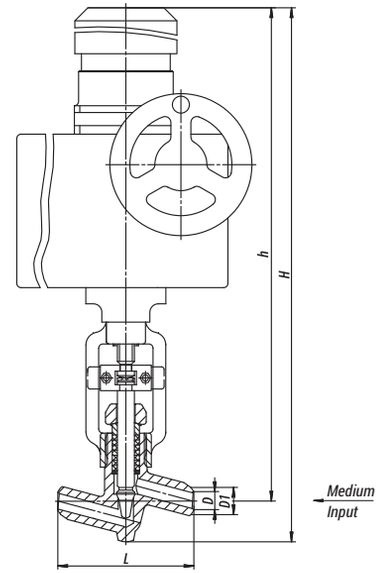

Figure 66
Control Valve with
a Built-in Electric Actuator

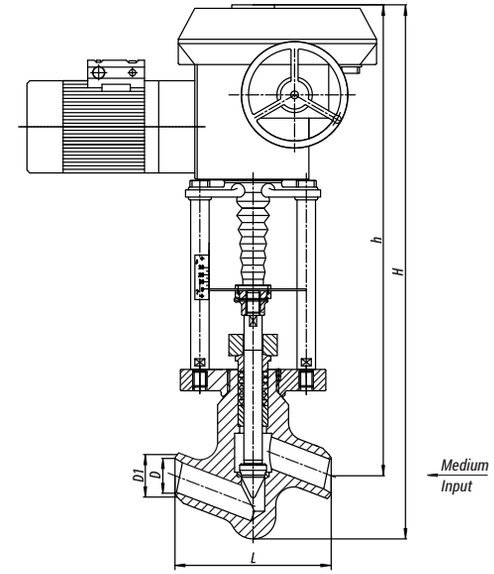

Figure 67
Control Valve with
a Built-in Electric Actuator

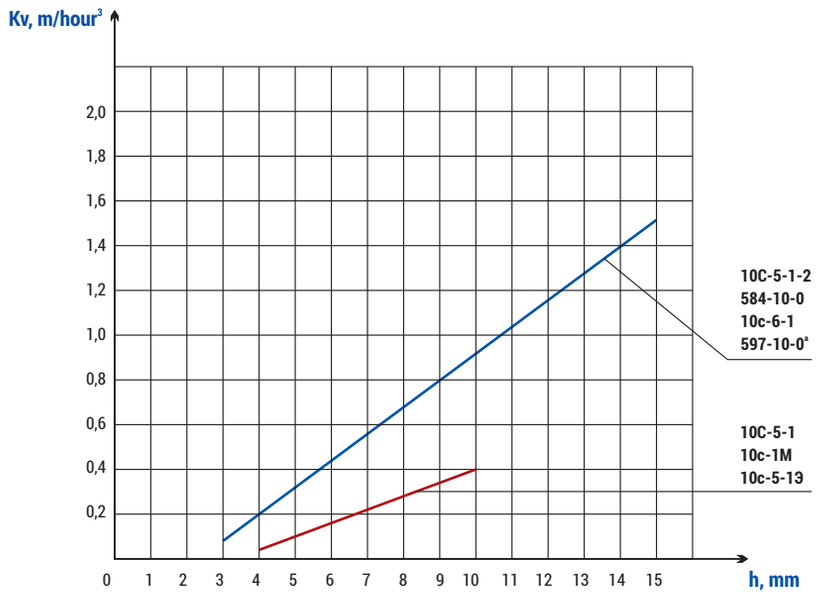

Diagram 13

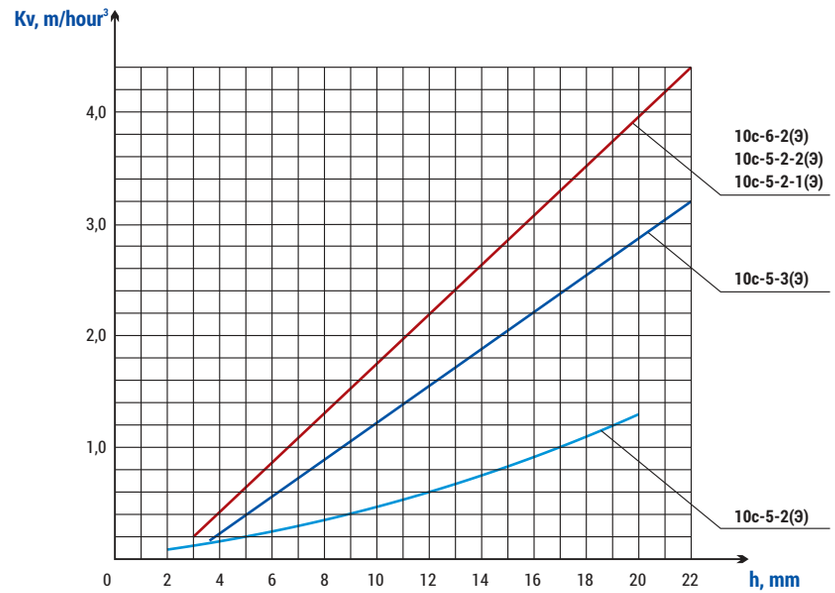

Diagram 14

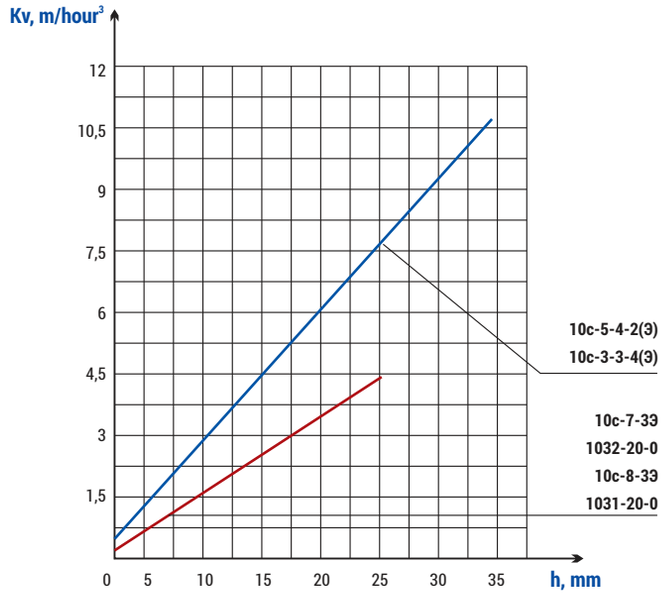

Diagram 15

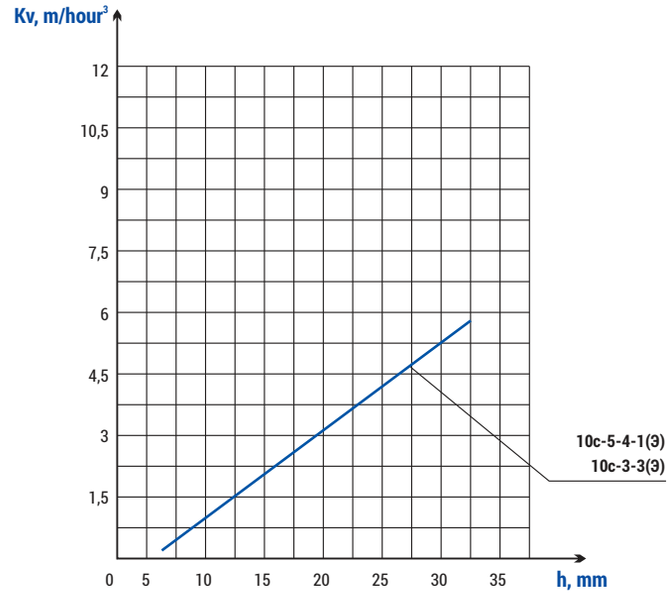

Diagram 16

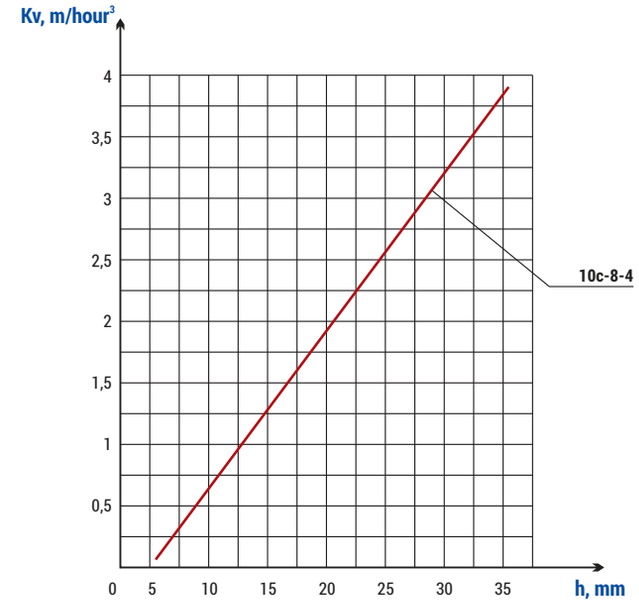

Diagram 17

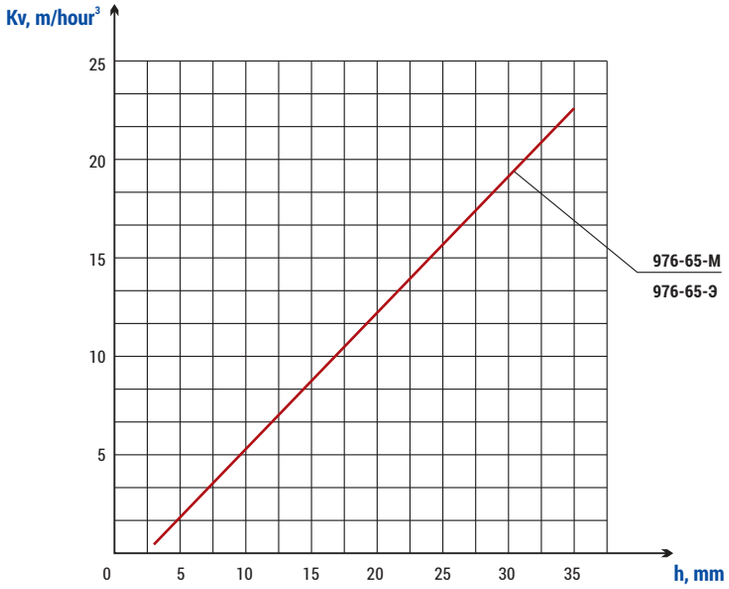

Diagram 18

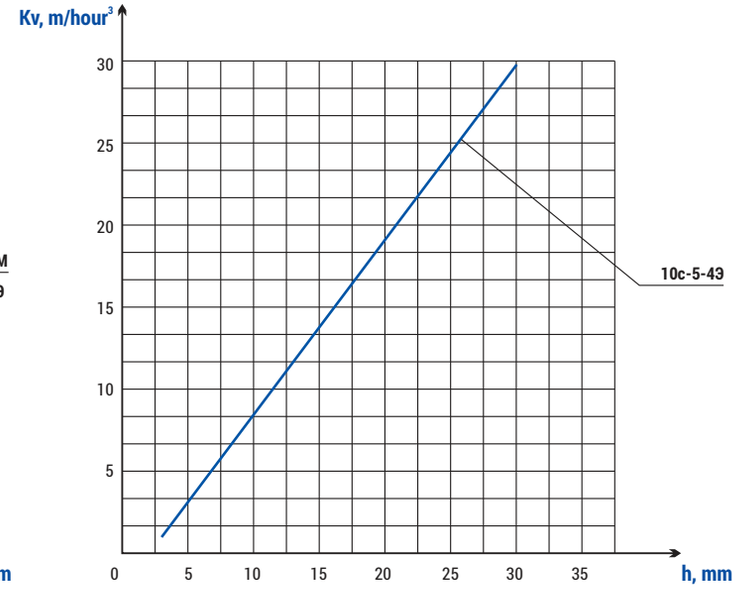

Diagram 19

Control Angle Valves

Identification	DN, mm	Pp, MPa	Tmax of the Medium,°C	Body Material, Steel	Working Medium	Max. Pressure Differential, MPa	Мкр., N•m, not more than	Operating Stroke, mm	Max. Kv, m/hour³	F, cm²	d, mm	d1, mm	D, mm	D1, mm	H, mm	h, mm	h1, mm	Electric Actuator Identification	N, kW	t of the Stroke, sec.	Weight without Electric Actuator, kg	Full Weight, kg	Figure	Diagram
1438-20-Э	20	37,3	280	20	Water	4	20кН*	29	2,9	0,58	20	28	32	45	905	115	70	МЭП-25000/100-50-У-99	0,3	58	13	38	68	20
1438-20-Э-01	20	37,3	280	20	Water	4	20кН*	29	2,7	0,51	20	28	32	45	905	115	70	МЭП-25000/100-50-У-99	0,3	58	13	38	68	20
1438-20-Э-02	20	37,3	280	20	Water	4	20кН*	29	2,0	0,41	20	28	32	45	905	115	70	МЭП-25000/100-50-У-99	0,3	58	13	38	68	20
1438-20-Э-03	20	37,3	280	20	Water	4	20кН*	29	1,8	0,38	20	28	32	45	905	115	70	МЭП-25000/100-50-У-99	0,3	58	13	38	68	20
1438-20-Э-04	20	37,3	280	20	Water	4	20кН*	29	1,4	0,3	20	28	32	45	905	115	70	МЭП-25000/100-50-У-99	0,3	58	13	38	68	20
1438-20-Э-05	20	37,3	280	20	Water	4	20кН*	29	0,8	0,17	20	28	32	45	905	115	70	МЭП-25000/100-50-У-99	0,3	58	13	38	68	20
1438-20-Э-06	20	37,3	280	20	Water	12	20кН*	16	2,9	1,33	20	28	32	45	905	115	70	МЭП-25000/100-50-У-99	0,3	32	13	38	68	20
1438-20-Э-07	20	37,3	280	20	Water	12	20кН*	16	2,7	1,27	20	28	32	45	905	115	70	МЭП-25000/100-50-У-99	0,3	32	13	38	68	20
1438-20-Э-08	20	37,3	280	20	Water	12	20кН*	16	2,0	0,84	20	28	32	45	905	115	70	МЭП-25000/100-50-У-99	0,3	32	13	38	68	20
1438-20-Э-09	20	37,3	280	20	Water	12	20кН*	16	1,8	0,78	20	28	32	45	905	115	70	МЭП-25000/100-50-У-99	0,3	32	13	38	68	20
1438-20-Э-10	20	37,3	280	20	Water	12	20кН*	16	1,4	0,64	20	28	32	45	905	115	70	МЭП-25000/100-50-У-99	0,3	32	13	38	68	20
1438-20-Э-11	20	37,3	280	20	Water	12	20кН*	16	0,8	0,39	20	28	32	45	905	115	70	МЭП-25000/100-50-У-99	0,3	32	13	38	68	20
1438-20-Э-12	20	37,3	280	20	Water	12	20кН*	16	0,5	0,25	20	28	32	45	905	115	70	МЭП-25000/100-50-У-99	0,3	32	13	38	68	20
1438-20-Э-13	20	37,3	280	20	Water	12	20кН*	16	0,3	0,15	20	28	32	45	905	115	70	МЭП-25000/100-50-У-99	0,3	32	13	38	68	20
1464-40-Э	40	37,3	280	20	Water	4	25кН*	49	22,0	3,78	39	39	60	60	970	150	100	МЭП-25000/100-50-У-99	0,3	98	22	47	68	21
1464-40-Э-01	40	37,3	280	20	Water	4	25кН*	49	12,0	2,38	39	39	60	60	970	150	100	МЭП-25000/100-50-У-99	0,3	98	22	47	68	21
1464-40-Э-02	40	37,3	280	20	Water	4	25кН*	49	9,0	1,78	39	39	60	60	970	150	100	МЭП-25000/100-50-У-99	0,3	98	22	47	68	21
1464-40-Э-03	40	37,3	280	20	Water	4	25кН*	49	8,0	1,59	39	39	60	60	970	150	100	МЭП-25000/100-50-У-99	0,3	98	22	47	68	21
1464-40-Э-04	40	37,3	280	20	Water	4	25кН*	49	5,5	1,09	39	39	60	60	970	150	100	МЭП-25000/100-50-У-99	0,3	98	22	47	68	21
1464-40-Э-05	40	37,3	280	20	Water	4	25кН*	49	4,5	0,89	39	39	60	60	970	150	100	МЭП-25000/100-50-У-99	0,3	98	22	47	68	21
1436-65-Э	65	23,5	250	20	Water	4	20кН*	49	22,0	3,78	58	58	76	76	970	150	100	МЭП-25000/100-50-У-99	0,3	98	22	47	68	21
1436-65-Э-01	65	23,5	250	20	Water	4	20кН*	49	12,0	2,38	58	58	76	76	970	150	100	МЭП-25000/100-50-У-99	0,3	98	22	47	68	21
1436-65-Э-02	65	23,5	250	20	Water	4	20кН*	49	9,0	1,78	58	58	76	76	970	150	100	МЭП-25000/100-50-У-99	0,3	98	22	47	68	21
1436-65-Э-03	65	23,5	250	20	Water	4	20кН*	49	8,0	1,59	58	58	76	76	970	150	100	МЭП-25000/100-50-У-99	0,3	98	22	47	68	21
1436-65-Э-04	65	23,5	250	20	Water	4	20кН*	49	5,5	1,09	58	58	76	76	970	150	100	МЭП-25000/100-50-У-99	0,3	98	22	52	68	21
1436-65-Э-05	65	23,5	250	20	Water	4	20кН*	49	4,5	0,89	58	58	76	76	970	150	100	МЭП-25000/100-50-У-99	0,3	98	22	52	68	21
1438-20-Р	20	37,3	280	20	Water	4	1,9кН**	29	2,9	0,58	20	28	32	45	502	115	70	МЭО-630/25-0,25У-92К	0,2	8	15,9	90	69	20
1438-20-Р-01	20	37,3	280	20	Water	4	1,9кН**	29	2,7	0,51	20	28	32	45	502	115	70	МЭО-630/25-0,25У-92К	0,2	8	15,9	90	69	20
1438-20-Р-02	20	37,3	280	20	Water	4	1,9кН**	29	2,0	0,41	20	28	32	45	502	115	70	МЭО-630/25-0,25У-92К	0,2	8	15,9	90	69	20
1438-20-Р-03	20	37,3	280	20	Water	4	1,9кН**	29	1,8	0,38	20	28	32	45	502	115	70	МЭО-630/25-0,25У-92К	0,2	8	15,9	90	69	20
1438-20-Р-04	20	37,3	280	20	Water	4	1,9кН**	29	1,4	0,3	20	28	32	45	502	115	70	МЭО-630/25-0,25У-92К	0,2	8	15,9	90	69	20
1438-20-Р-05	20	37,3	280	20	Water	4	1,9кН**	29	0,8	0,17	20	28	32	45	502	115	70	МЭО-630/25-0,25У-92К	0,2	8	15,9	90	69	20
1438-20-Р-06	20	37,3	280	20	Water	12	1,9кН**	16	2,9	1,33	20	28	32	45	502	115	70	МЭО-630/25-0,25У-92К	0,2	3	15,9	90	69	20
1438-20-Р-07	20	37,3	280	20	Water	12	1,9кН**	16	2,7	1,27	20	28	32	45	502	115	70	МЭО-630/25-0,25У-92К	0,2	3	15,9	90	69	20
1438-20-Р-08	20	37,3	280	20	Water	12	1,9кН**	16	2,0	0,84	20	28	32	45	502	115	70	МЭО-630/25-0,25У-92К	0,2	3	15,9	90	69	20
1438-20-Р-09	20	37,3	280	20	Water	12	1,9кН**	16	1,8	0,78	20	28	32	45	502	115	70	МЭО-630/25-0,25У-92К	0,2	3	15,9	90	69	20
1438-20-Р-10	20	37,3	280	20	Water	12	1,9кН**	16	1,4	0,64	20	28	32	45	502	115	70	МЭО-630/25-0,25У-92К	0,2	3	15,9	90	69	20
1438-20-Р-11	20	37,3	280	20	Water	12	1,9кН**	16	0,8	0,39	20	28	32	45	502	115	70	МЭО-630/25-0,25У-92К	0,2	3	15,9	90	69	20
1438-20-Р-12	20	37,3	280	20	Water	12	1,9кН**	16	0,5	0,25	20	28	32	45	502	115	70	МЭО-630/25-0,25У-92К	0,2	3	15,9	90	69	20
1438-20-Р-13	20	37,3	280	20	Water	12	1,9кН**	16	0,3	0,15	20	28	32	45	502	115	70	МЭО-630/25-0,25У-92К	0,2	3	15,9	90	69	20
879-65-Р[a]	65	23,5	250	20	Water	15,7	1580**	24	1,4	0,5	-	-	-	-	-	-	-	МЭО-630/25-0,25У-92К	0,2	20	40	114	70	22
879-65-Р[a]-01	65	23,5	250	20	Water	15,7	1580**	24	2,1	0,78	-	-	-	-	-	-	-	МЭО-630/25-0,25У-92К	0,2	20	40	114	70	22
879-65-Р[a]-02	65	23,5	250	20	Water	15,7	1580**	24	2,8	1	-	-	-	-	-	-	-	МЭО-630/25-0,25У-92К	0,2	20	40	114	70	22
879-65-Р[a]-03	65	23,5	250	20	Water	15,7	1580**	24	4,3	1,55	-	-	-	-	-	-	-	МЭО-630/25-0,25У-92К	0,2	20	40	114	70	22
879-65-Р[a]-04	65	23,5	250	20	Water	15,7	1580**	24	5,6	2	-	-	-	-	-	-	-	МЭО-630/25-0,25У-92К	0,2	20	40	114	70	22

** - Pressure, P*
*** - lever force, H*

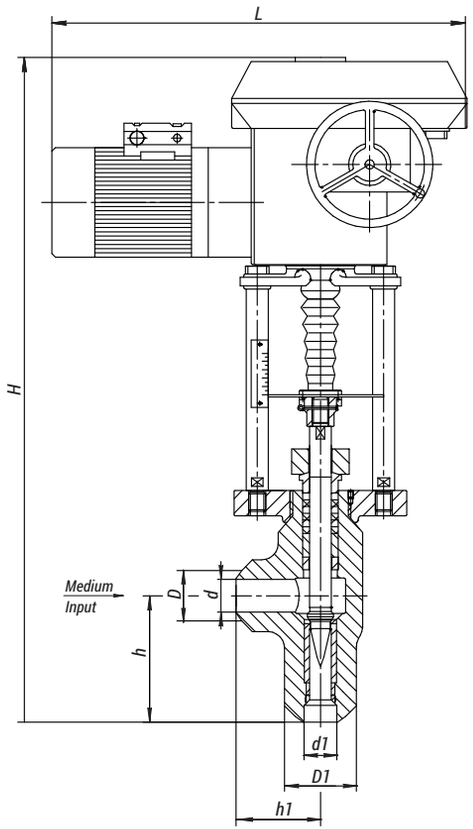

Figure 68
Control Valve

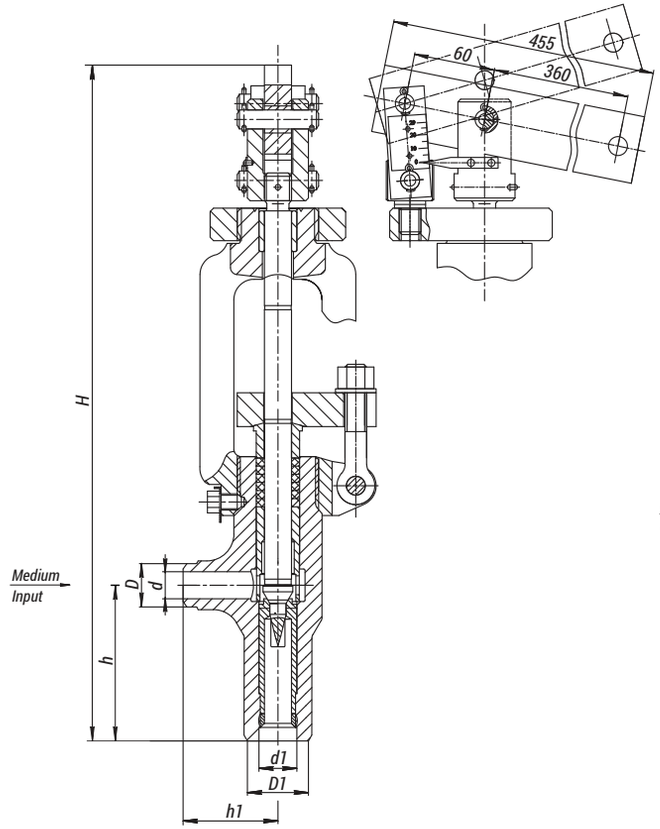

Figure 69
Control Valve

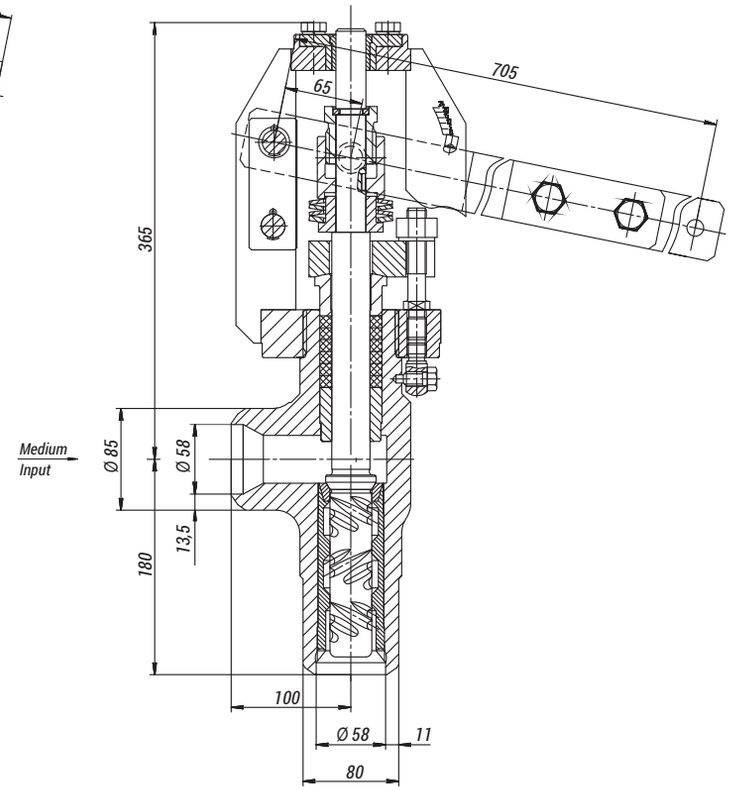

Figure 70
Cascade Control Valve

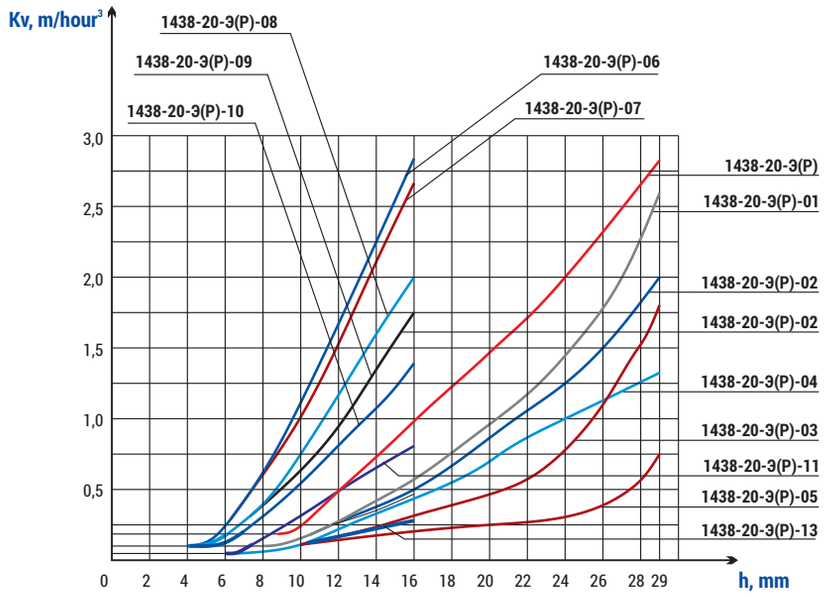

Diagram 20

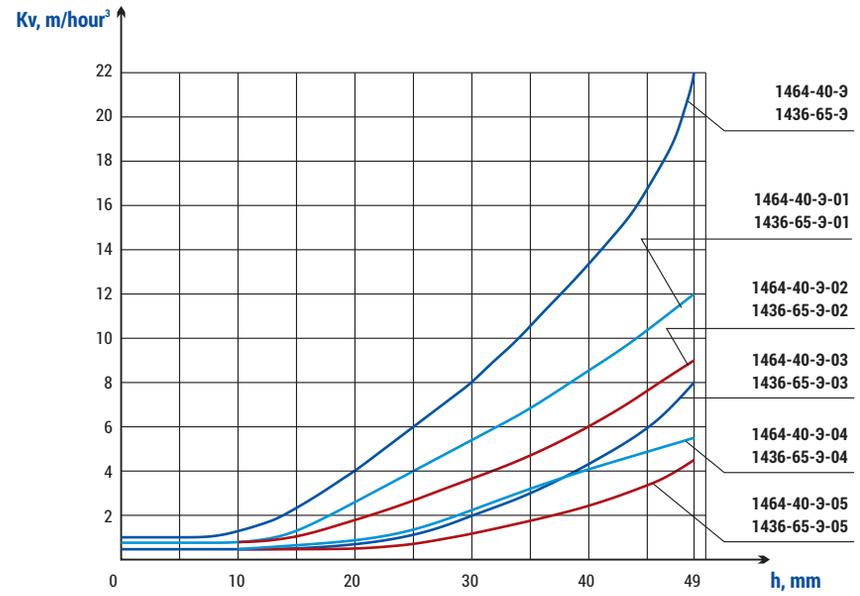

Diagram 21

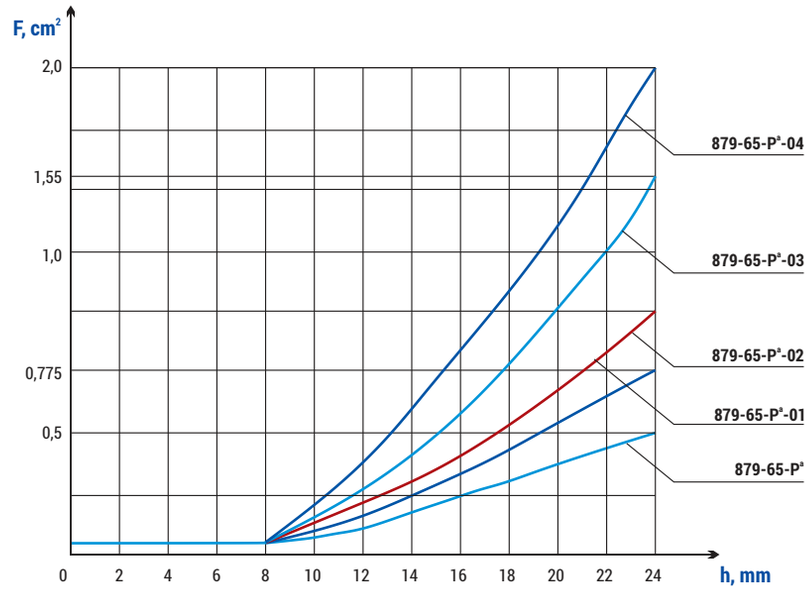

Diagram 22

Production according to TR 3740-002-15365247-2004

Double Seat Control Valves of Type 14c

Purpose

The double seat control valves of type 14c are intended for the control of the working medium flow or pressure.

- The control is carried out with the help of changing the passage area by means of translational movement of the double seat spool.
- They are not used as shutoff devices.

Technical specifications

Pipeline connection: welded connection.
Climatic version: У, УХЛ, ХЛ, Т according to GOST 15150-69.
Placement category: 2, 3 according to GOST 15150-69.
Depending on the lifting height of the spool, the throughput capability is shown in the diagram 26.

Control

The control of the control valves of type 14c is carried out with the help of a multi-turn built-in electric actuator with a current position sensor of the following types:

- ПЭМ-Б2У (ABS ZEIM Automation);
- SAR (AUMA);
- upon the customer's demand.

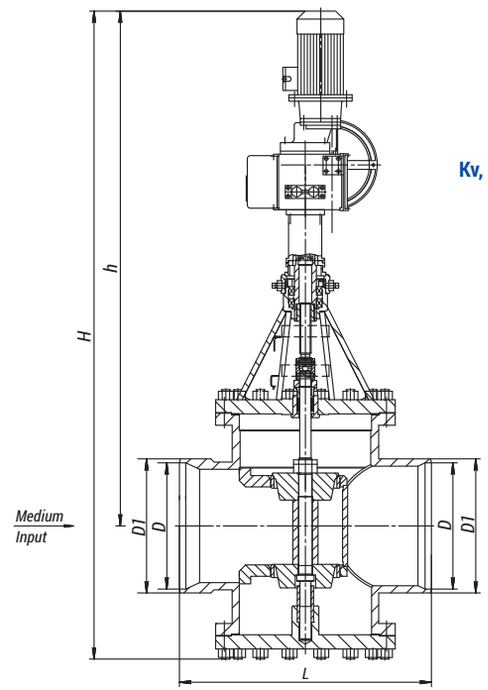

Figure 71
Double Seat Control Valve

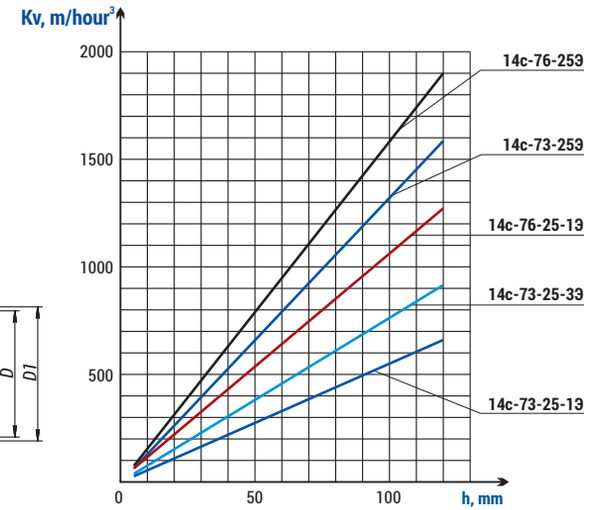

Diagram 23

Identification	DN, mm	PN, MPa	Tmax of the medium, °C	Body Material, Steel	Working Medium	Мкр. N•м, not more than	Full Stroke Rotation Number	Operating Stroke, mm	Max. Kv, m/hour³	F, cm²	Inlet/Outlet Diameter, mm	D, mm	D1, mm	L, mm	H, mm	h, mm	Electric Actuator Identification	N, kW	t of the Stroke, sec.		Full Weight, kg	Figure	Diagram
14c-73-25Э	300	2,5	425	20	Water-Steam	250	20	120	1585	450	300/300	303	325	800	2042	1626	ПЭМ-Б2У	0,55	48	626	667	71	23
14c-73-25-1Э	300	2,5	425	20	Water-Steam	250	20	120	660	192	300/300	303	325	800	2042	1626	ПЭМ-Б2У	0,55	48	617	658	71	23
14c-73-25-3Э	300	2,5	425	20	Water-Steam	250	20	120	915	260	300/300	303	325	800	2042	1626	ПЭМ-Б2У	0,55	48	619	660	71	23
14c-76-25Э	400	2,5	425	20	Water-Steam	250	20	120	1900	540	400/400	401	426	800	2093	1651	ПЭМ-Б2У	0,55	48	664	705	71	23
14c-76-25-1Э	400	2,5	425	20	Water-Steam	250	20	120	1250	350	400/400	401	426	800	2093	1651	ПЭМ-Б2У	0,55	48	667	708	71	23

Production according to TR 2913-001-15365247-2004

Special Control Valves of Type 18c

Purpose

The special control valves of type 18c are used as controlled throttle units of FRPRDS and PRDS, as well as for the control of the working medium pressure in steam and water pipelines.

The valves are designed and manufactured considering specific requirements of the customer to order.

Structural designs:

- globe control valves;
- control valves.

Technical specifications

Pipeline connection: welded connection.
Climatic version: У, УХЛ, ХЛ, Т according to GOST 15150-69.
Placement category: 1, 2, 3 according to GOST 15150-69.

Control

The valve control is carried out with the help of the following actuators:

- a single-turn electric actuator (МЭО) through the lever;
- multi-turn built-in electric actuators with a current position sensor of single-turn electric flanged actuator (ПЭМ) type (ABS ZEIM Automation), SAR (AUMA);
- actuators of other manufacturers with standard connection units.

Identification	DN, mm	PN, MPa	Tmax of the Medium, °C	Body Material, Steel	Working Medium	Max. Kv, m/hour³	Мкр., N•m, not more than	Full Stroke Rotation Number	Operating Stroke, mm	Body Type	F, cm²	L, mm	H, mm	h, mm	Inlet/Outlet Diameter, mm	D1, mm	D2, mm	D3, mm	D4, mm	Electric Actuator Identification	N, kW	t of the Stroke, sec.	Weight without Electric Actuator, kg	Full Weight with Electric Actuator, kg	Figure	Diagram
18c-2-2	80	2,5*	450	20	Water-Steam	63	96	0,25	-	Straight	20	430	524	338	80/80	79	95	79	95	МЭО-100/25-0,25У-99К	0,17	25	96	123,5	72	25
18c-2-3	100	2,5*	450	20	Water-Steam	100	96	0,25	-	Straight	33	430	524	338	100/100	97	108	97	108	МЭО-100/25-0,25У-99К	0,17	25	100	127,5	72	25
18c-2-4-1	150	2,5*	450	20	Water-Steam	160	130	0,25	-	Straight	40	500	650	385	150/200	142	159	203	219	МЭО-250/25-0,25У-99К	0,25	25	202	229,5	72	26
18c-2-4-2	150	2,5*	450	20	Water-Steam	200	130	0,25	-	Straight	50	500	650	385	150/200	142	159	203	219	МЭО-250/25-0,25У-99К	0,25	25	202	229,5	72	26
18c-2-4-3	150	2,5*	450	20	Water-Steam	250	250	0,25	-	Straight	64	500	650	385	150/200	142	159	203	219	МЭО-250/25-0,25У-99К	0,25	25	202	229,5	72	26
18c-2-4-4	150	2,5*	450	20	Water-Steam	300	280	0,25	-	Straight	74	500	650	385	150/200	142	159	203	219	МЭО-250/25-0,25У-99К	0,25	25	202	229,5	72	26
18c-2-9	400	1,6	350	20	Water-Steam	1064	580	0,25	-	Straight	264	840	1050	560	400/400	410	426	410	426	МЭО-630/25-0,25У-92К	0,20	25	680	754	72	28
18c-2-9Э	400	1,6	350	20	Water-Steam	650	1000	0,25	-	Straight	164	750	1435	1015	300/400	303	325	410	426	МЭОФ-1000/25-0,25У-97К	0,22	25	714	750	73	29

* - Pressure, P

Special Control Valves of Type 18c

Identification	DN, mm	PN, MPa	Tmax of the Medium, °C	Body Material, Steel	Working Medium	Max. Kv, m/hour²	Mкр., N•m, not more than	Full Stroke Rotation Number	Opera-ting Stroke, mm	Body Type	F, cm²	L, mm	H, mm	h, mm	Inlet/Outlet Diameter, mm	D1, mm	D2, mm	D3, mm	D4, mm	Electric Actuator Identification	N, kW	t of the Stroke, sec.	Weight without Electric Actuator, kg	Full Weight with Electric Actuator, kg	Figure	Diagram
18с-8-2-01Э	150	13,7*	560	12Х1МФ	Steam	250	300	2,0	24	Angle	100	305	1717	1406	150/250	156	219	248	273	ПЭМ-Б2У	0,55	5	462	503	75	30
18с-2-6Э	250	10	450	20	Steam	250	300	8,0	50	Straight	100	500	1588	1328	250/300	244	303	273	325	ПЭМ-Б5У	1,1	10	397	438	74	27
18с-5-2Э	150	6,3	425	25Л	Water-Steam	456	250	21,5	130	Straight	113	450	1663	1515	150/150	147	160	147	160	ПЭМ-Б2У	0,55	52	150,8	190,8	76	31
18с-5-2Э-01	150	6,3	425	25Л	Water-Steam	340	250	21,5	130	Straight	84	450	1663	1515	150/150	147	160	147	160	ПЭМ-Б2У	0,55	52	151,4	191,4	76	31
18с-5-2Э-02	150	6,3	425	25Л	Water-Steam	270	250	21,5	130	Straight	67	450	1663	1515	150/150	147	160	147	160	ПЭМ-Б2У	0,55	52	151,6	191,6	76	31
18с-5-2Э-03	150	6,3	425	25Л	Water-Steam	200	250	21,5	130	Straight	50	450	1663	1515	150/150	147	160	147	160	ПЭМ-Б2У	0,55	52	151,85	191,85	76	31
18с-5-2Э-04	150	6,3	425	25Л	Water-Steam	160	250	21,5	130	Straight	40	450	1663	1515	150/150	147	160	147	160	ПЭМ-Б2У	0,55	52	152,0	192	76	31
18с-5-2Э-05	150	6,3	425	25Л	Water-Steam	120	250	21,5	130	Straight	30	450	1663	1515	150/150	147	160	147	160	ПЭМ-Б2У	0,55	52	152,1	192,1	76	31
18с-5-2Э-06	150	6,3	425	25Л	Water-Steam	100	250	21,5	130	Straight	25	450	1663	1515	150/150	147	160	147	160	ПЭМ-Б2У	0,55	52	152,2	192,2	76	31
18с-6-2Э	150	10	450	25Л	Water-Steam	456	250	21,5	130	Straight	113	450	1663	1515	150/150	142	160	142	160	ПЭМ-Б2У	0,55	52	151,3	191,3	76	31
18с-6-2Э-01	150	10	450	25Л	Water-Steam	340	250	21,5	130	Straight	84	450	1663	1515	150/150	142	160	142	160	ПЭМ-Б2У	0,55	52	151,9	191,9	76	31
18с-6-2Э-02	150	10	450	25Л	Water-Steam	270	250	21,5	130	Straight	67	450	1663	1515	150/150	142	160	142	160	ПЭМ-Б2У	0,55	52	152,1	192,1	76	31
18с-6-2Э-03	150	10	450	25Л	Water-Steam	200	250	21,5	130	Straight	50	450	1663	1515	150/150	142	160	142	160	ПЭМ-Б2У	0,55	52	152,35	192,35	76	31
18с-6-2Э-04	150	10	450	25Л	Water-Steam	160	250	21,5	130	Straight	40	450	1663	1515	150/150	142	160	142	160	ПЭМ-Б2У	0,55	52	152,5	192,5	76	31
18с-6-2Э-05	150	10	450	25Л	Water-Steam	120	250	21,5	130	Straight	30	450	1663	1515	150/150	142	160	142	160	ПЭМ-Б2У	0,55	52	152,6	192,6	76	31
18с-6-2Э-06	150	10	450	25Л	Water-Steam	100	250	21,5	130	Straight	25	450	1663	1515	150/150	142	160	142	160	ПЭМ-Б2У	0,55	52	152,7	192,7	76	31
18с-5-3Э	200	6,3	425	25Л	Water-Steam	456	250	21,5	130	Straight	113	550	1663	1515	200/200	203	220	203	220	ПЭМ-Б2У	0,55	52	166,3	206,3	76	31
18с-5-3Э-01	200	6,3	425	25Л	Water-Steam	340	250	21,5	130	Straight	84	550	1663	1515	200/200	203	220	203	220	ПЭМ-Б2У	0,55	52	166,9	206,9	76	31
18с-5-3Э-02	200	6,3	425	25Л	Water-Steam	270	250	21,5	130	Straight	67	550	1663	1515	200/200	203	220	203	220	ПЭМ-Б2У	0,55	52	167,1	207,1	76	31
18с-5-3Э-03	200	6,3	425	25Л	Water-Steam	200	250	21,5	130	Straight	50	550	1663	1515	200/200	203	220	203	220	ПЭМ-Б2У	0,55	52	167,35	207,35	76	31
18с-5-3Э-04	200	6,3	425	25Л	Water-Steam	160	250	21,5	130	Straight	40	550	1663	1515	200/200	203	220	203	220	ПЭМ-Б2У	0,55	52	167,5	207,5	76	31
18с-5-3Э-05	200	6,3	425	25Л	Water-Steam	120	250	21,5	130	Straight	30	550	1663	1515	200/200	203	220	203	220	ПЭМ-Б2У	0,55	52	167,6	207,6	76	31
18с-5-3Э-06	200	6,3	425	25Л	Water-Steam	100	250	21,5	130	Straight	25	550	1663	1515	200/200	203	220	203	220	ПЭМ-Б2У	0,55	52	167,7	207,7	76	31
18с-6-3Э	200	10	450	25Л	Water-Steam	456	250	21,5	130	Straight	113	550	1663	1515	200/200	195	220	195	220	ПЭМ-Б2У	0,55	52	166,8	206,8	76	31
18с-6-3Э-01	200	10	450	25Л	Water-Steam	340	250	21,5	130	Straight	84	550	1663	1515	200/200	195	220	195	220	ПЭМ-Б2У	0,55	52	167,4	207,4	76	31
18с-6-3Э-02	200	10	450	25Л	Water-Steam	270	250	21,5	130	Straight	67	550	1663	1515	200/200	195	220	195	220	ПЭМ-Б2У	0,55	52	167,6	207,6	76	31
18с-6-3Э-03	200	10	450	25Л	Water-Steam	200	250	21,5	130	Straight	50	550	1663	1515	200/200	195	220	195	220	ПЭМ-Б2У	0,55	52	167,85	207,85	76	31
18с-6-3Э-04	200	10	450	25Л	Water-Steam	160	250	21,5	130	Straight	40	550	1663	1515	200/200	195	220	195	220	ПЭМ-Б2У	0,55	52	168,0	208	76	31
18с-6-3Э-05	200	10	450	25Л	Water-Steam	120	250	21,5	130	Straight	30	550	1663	1515	200/200	195	220	195	220	ПЭМ-Б2У	0,55	52	168,1	208,1	76	31
18с-6-3Э-06	200	10	450	25Л	Water-Steam	100	250	21,5	130	Straight	25	550	1663	1515	200/200	195	220	195	220	ПЭМ-Б2У	0,55	52	168,2	208,2	76	31
18с-5-4Э	250	6,3	425	25Л	Water-Steam	1585	600	32,0	190	Straight	254	650	1490	1280	250/250	254	275	254	275	ПЭМ-В3-630-25-36У	3,1	77	312	400	76	24
18с-5-4Э-01	250	6,3	425	25Л	Water-Steam	915	600	32,0	190	Straight	179	650	1490	1280	250/250	254	275	254	275	ПЭМ-В3-630-25-36У	3,1	77	312	400	76	24
18с-5-4Э-02	250	6,3	425	25Л	Water-Steam	660	600	32,0	190	Straight	136	650	1490	1280	250/250	254	275	254	275	ПЭМ-В3-630-25-36У	3,1	77	312	400	76	24
18с-6-4Э	250	10	450	25Л	Water-Steam	1585	1000	32,0	190	Straight	254	650	1490	1280	250/250	244	275	244	275	ПЭМ-В35-1000-25-36У	3,1	77	312	400	76	24
18с-6-4Э-01	250	10	450	25Л	Water-Steam	915	1000	32,0	190	Straight	179	650	1490	1280	250/250	244	275	244	275	ПЭМ-В35-1000-25-36У	3,1	77	312	400	76	24
18с-6-4Э-02	250	10	450	25Л	Water-Steam	660	1000	32,0	190	Straight	136	650	1490	1280	250/250	244	275	244	275	ПЭМ-В35-1000-25-36У	3,1	77	312	400	76	24
18с-5-5Э	300	6,3	425	25Л	Water-Steam	1585	600	32,0	190	Straight	254	750	1490	1280	300/300	303	325	303	325	ПЭМ-В3-630-25-36У	3,1	77	357	445	76	24
18с-5-5Э-01	300	6,3	425	25Л	Water-Steam	915	600	32,0	190	Straight	179	750	1490	1280	300/300	303	325	303	325	ПЭМ-В3-630-25-36У	3,1	77	357	445	76	24
18с-5-5Э-02	300	6,3	425	25Л	Water-Steam	660	600	32,0	190	Straight	136	750	1490	1280	300/300	303	325	303	325	ПЭМ-В3-630-25-36У	3,1	77	357	445	76	24
18с-6-5Э	300	10	450	25Л	Water-Steam	1585	1000	32,0	190	Straight	254	750	1490	1280	300/300	290	331	290	331	ПЭМ-В35-1000-25-36У	3,1	77	357	445	76	24
18с-6-5Э-01	300	10	450	25Л	Water-Steam	915	1000	32,0	190	Straight	179	750	1490	1280	300/300	290	331	290	331	ПЭМ-В35-1000-25-36У	3,1	77	357	445	76	24
18с-6-5Э-02	300	10	450	25Л	Water-Steam	660	1000	32,0	190	Straight	136	750	1490	1280	300/300	290	331	290	331	ПЭМ-В35-1000-25-36У	3,1	77	357	445	76	24

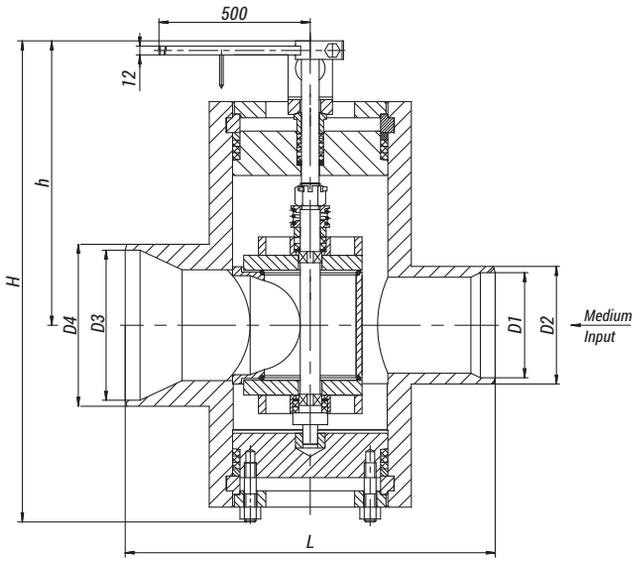

Figure 72
Control Valve

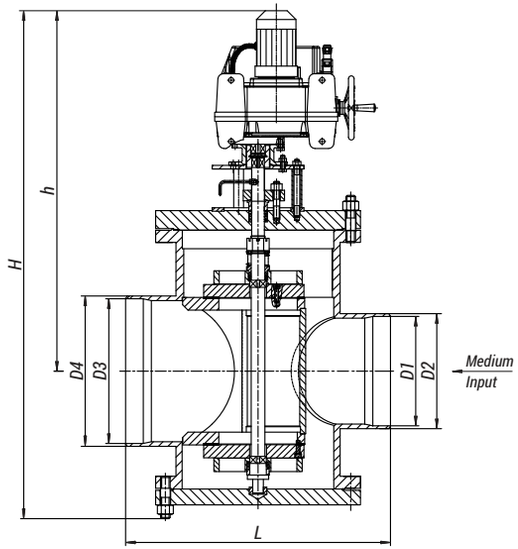

Figure 73
Control Valve

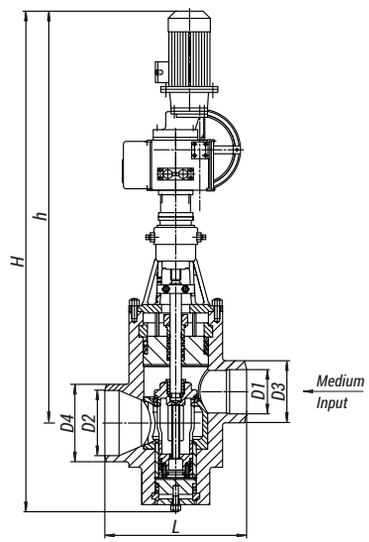

Figure 74
Control Valve

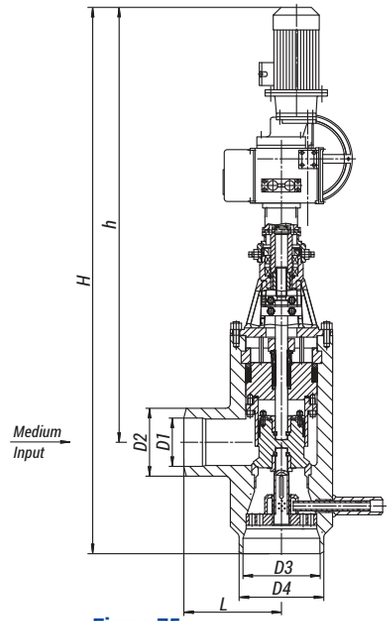

Figure 75
Control Valve

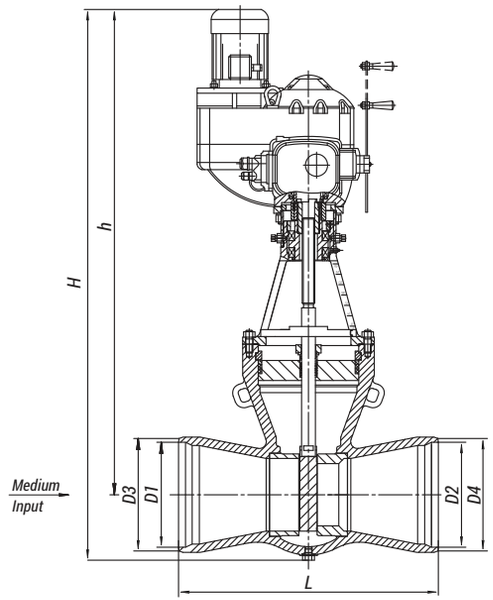

Figure 76
Control Valve

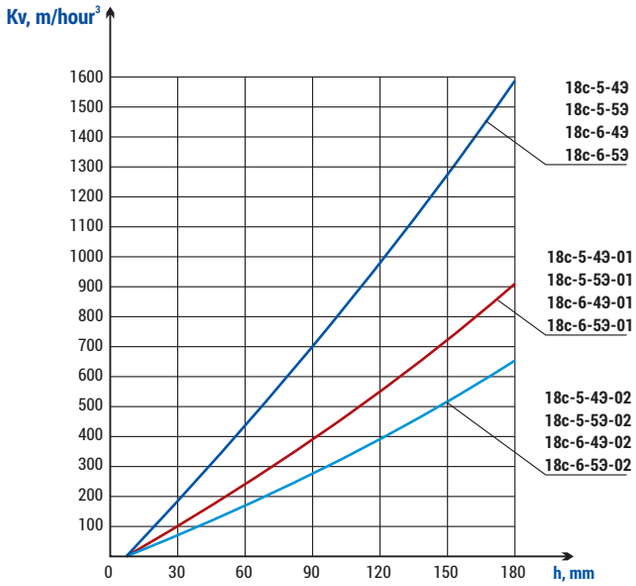

Diagram 24

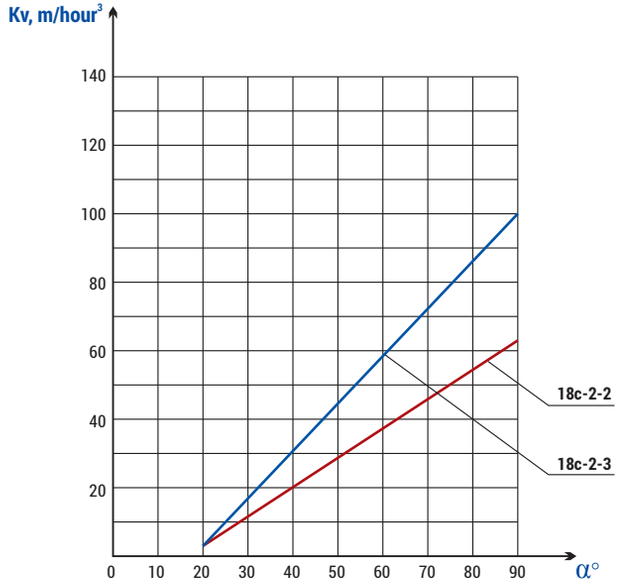

Diagram 25

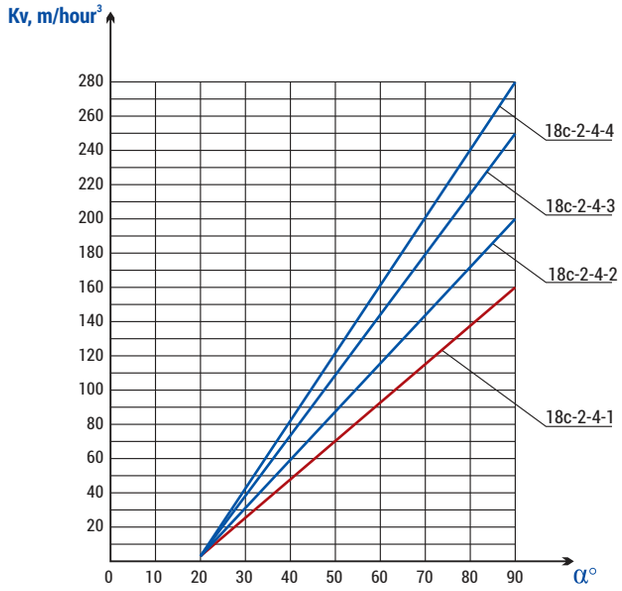

Diagram 26

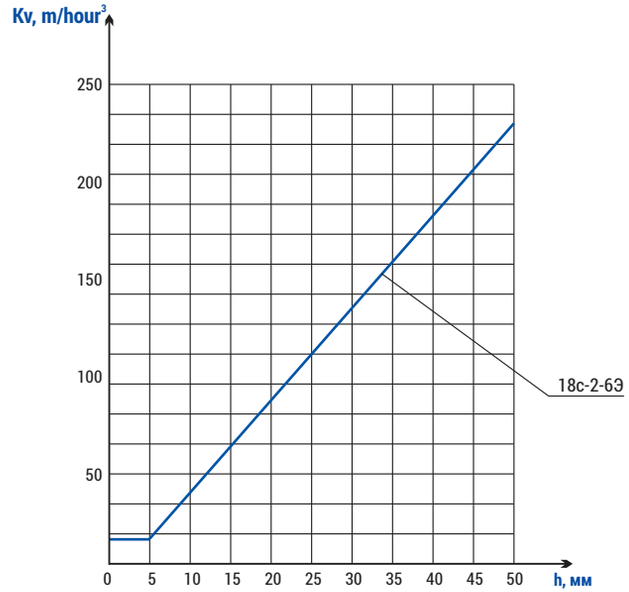

Diagram 27

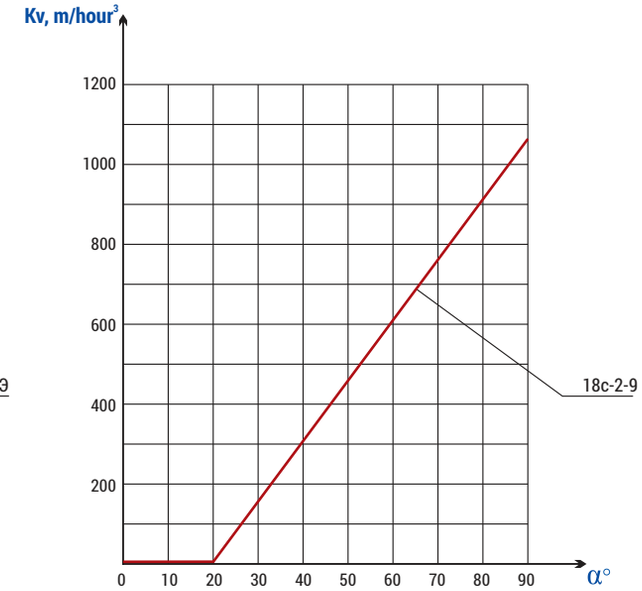

Diagram 28

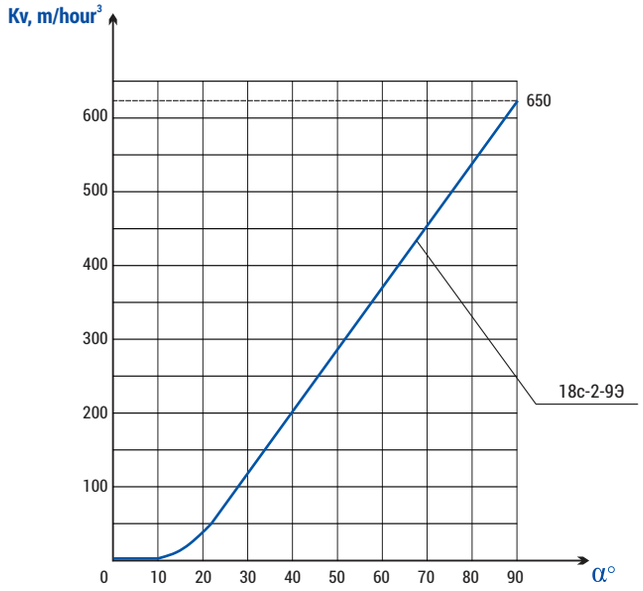

Diagram 29

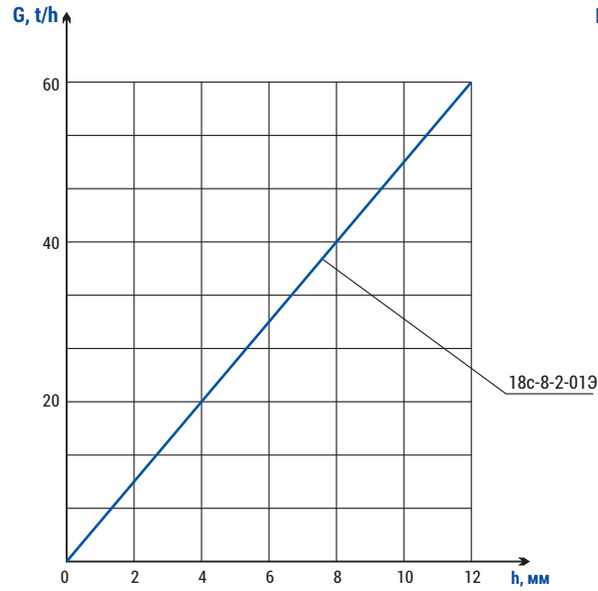

Diagram 30

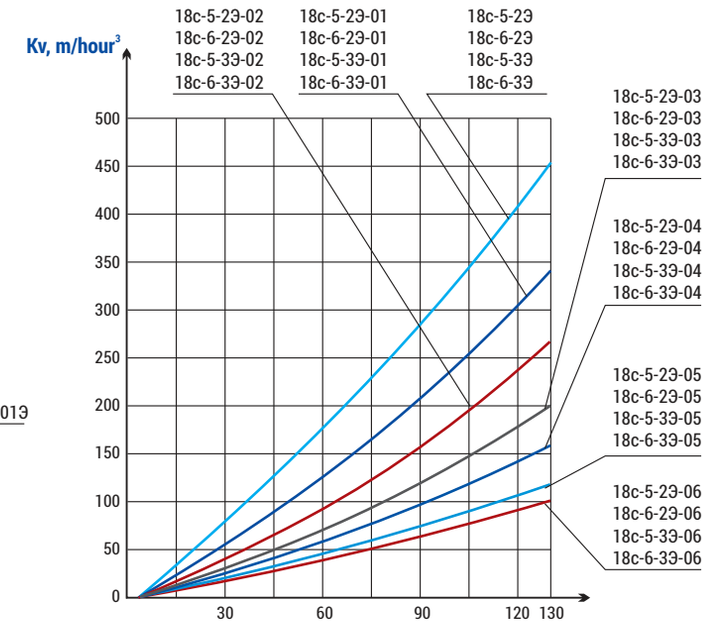

Diagram 31

Production according to TR 3740-002-15365247-2004

Slide Control Valves

Purpose

The slide control valves are used at heat power engineering sites for the control of the working medium flow or pressure.

- The control is performed by means of changing the passage area, which is achieved through translational movement of the slide gate.
- The maximum pressure differential on the valve is limited.

Installation position: on horizontal and vertical pipeline sections with the medium direction from the top downward.
Pipeline connection: welded connection.

Technical specifications

Climatic version: У, УХЛ, ХЛ, Т according to GOST 15150-69.
Placement category: 2, 3 according to GOST 15150-69.

Control

The valve control is carried out with the help of multi-turn built-in electric actuators with a current position sensor.

Identification	DN, mm	P, MPa	Tmax of the Medium, °C	Max. Steam Flow at Critical Pressure Differential, t/h	Max. Kv, m/hour³	F, cm²	Body Material, Steel	Working Medium	Мкр., N•m, not more than	Operating Stroke, mm	Full Stroke Rotation Number	Max. Pressure Differential, MPa	L, mm	H, mm	h, mm	D, mm	D1, mm	Electric Actuator Identification	N, kW	t of the Stroke, sec.	Weight without Electric Actuator, kg	Full Weight, kg	Figure	Diagram
1233-100-Э	100	25,0	545	225	-	30,0	15Х1М1ФЛ	Steam	530	125	16	-	600	1705	1410	97	172	793-ЭР-0I	3,2	21	404	512	77	32
1233-100-Э-01	100	25,0	545	375	-	50,0	15Х1М1ФЛ	Steam	530	125	16	-	600	1705	1410	97	172	793-ЭР-0I	3,2	21	404	512	77	32
1233-100-Э-02	100	25,0	545	315	-	42,0	15Х1М1ФЛ	Steam	530	125	16	-	600	1705	1410	97	172	793-ЭР-0I	3,2	21	404	512	77	32
1233-100-ЭЧ	100	25,0	545	225	-	30,0	15Х1М1ФЛ	Steam	530	125	16	-	600	2352	2060	97	172	ПЭМ-В35-1000-25-36У	2,2	38	415	492	77	32
1233-100-ЭЧ-01	100	25,0	545	375	-	50,0	15Х1М1ФЛ	Steam	530	125	16	-	600	2352	2060	97	172	ПЭМ-В35-1000-25-36У	2,2	38	415	492	77	32
1233-100-ЭЧ-02	100	25,0	545	315	-	42,0	15Х1М1ФЛ	Steam	530	125	16	-	600	2352	2060	97	172	ПЭМ-В35-1000-25-36У	2,2	38	415	492	77	32
993-100-Э	100	28,4	510	218	-	24,0	15Х1М1Ф	Steam	436	90	15	-	500	1180	1055	102	146	792-ЭР-0а	1,32	44	195	267	78	34
993-100-Э-01	100	28,4	510	400	-	44,0	15Х1М1Ф	Steam	436	90	15	-	500	1180	1055	102	146	792-ЭР-0а	1,32	44	195	267	78	34
993-100-ЭЧ	100	28,4	510	218	-	24,0	15Х1М1Ф	Steam	436	90	15	-	500	1217	1067	102	146	ПЭМ-В35-1000-25-36У	2,2	36	206	297	78	34
993-100-ЭЧ-01	100	28,4	510	400	-	44,0	15Х1М1Ф	Steam	436	90	15	-	500	1217	1067	102	146	ПЭМ-В35-1000-25-36У	2,2	36	206	297	78	34
1085-100-Э	100	9,8	540	71,5	-	24,0	15Х1М1Ф	Steam	153	60	10	-	400	1180	1055	112	146	792-ЭР-0аI	1,7	15	159	239	79	35
1085-100-Э-01	100	9,8	540	47,0	-	15,5	15Х1М1Ф	Steam	153	60	10	-	400	1180	1055	112	146	792-ЭР-0аI	1,7	15	159	239	79	35
1085-100-ЭЧ	100	9,8	540	71,5	-	24,0	15Х1М1Ф	Steam	153	60	10	-	400	1700	1575	112	146	ПЭМ-Б2У	0,55	24	163	203	79	35
1085-100-ЭЧ-01	100	9,8	540	47,0	-	15,5	15Х1М1Ф	Steam	153	60	10	-	400	1700	1575	112	146	ПЭМ-Б2У	0,55	24	163	203	79	35
1087-100-Э	100	13,7	560	92,5	-	24,0	15Х1М1Ф	Steam	208	60	10	-	400	1180	1055	94	146	792-ЭР-0аI	1,7	15	159	233	79	35
1087-100-Э-01	100	13,7	560	60,0	-	15,5	15Х1М1Ф	Steam	208	60	10	-	400	1180	1055	94	146	792-ЭР-0аI	1,7	15	159	233	79	35
1087-100-Э-02	100	13,7	560	35,0	-	9,5	15Х1М1Ф	Steam	208	60	10	-	400	1180	1055	94	146	792-ЭР-0аI	1,7	15	159	233	79	35
1087-100-ЭЧ	100	13,7	560	92,5	-	24,0	15Х1М1Ф	Steam	208	60	10	-	400	1700	1575	94	146	ПЭМ-Б2У	0,55	24	163	203	79	35
1087-100-ЭЧ-01	100	13,7	560	60,0	-	15,5	15Х1М1Ф	Steam	208	60	10	-	400	1700	1575	94	146	ПЭМ-Б2У	0,55	24	163	203	79	35
1087-100-ЭЧ-02	100	13,7	560	35,0	-	9,5	15Х1М1Ф	Steam	208	60	10	-	400	1700	1575	94	146	ПЭМ-Б2У	0,55	24	163	203	79	35
1086-100-Э	100	23,5	250	-	36,3	9,5	20	Water	217	60	10	7	400	1180	1055	109	146	792-ЭР-0а	1,32	30	161	239	79	33
1086-100-Э-01	100	23,5	250	-	96,7	24,0	20	Water	217	60	10	7	400	1180	1055	109	146	792-ЭР-0аI	1,7	15	159	239	79	33
1086-100-Э-02	100	23,5	250	-	36,3	9,5	20	Water	217	60	10	7	400	1180	1055	109	146	792-ЭР-0аI	1,7	15	159	239	79	33
1086-100-ЭЧ	100	23,5	250	-	36,3	9,5	20	Water	217	60	10	7	400	1700	1575	109	146	ПЭМ-Б2У	0,55	24	163	203	79	33
1086-100-ЭЧ-01	100	23,5	250	-	96,7	24,0	20	Water	217	60	10	7	400	1700	1575	109	146	ПЭМ-Б2У	0,55	24	163	203	79	33
1086-100-ЭЧ-02	100	23,5	250	-	36,3	9,5	20	Water	217	60	10	7	400	1700	1575	109	146	ПЭМ-Б2У	0,55	24	163	203	79	33

Identification	DN, mm	P, MPa	Tmax of the Medium, °C	Max. Steam Flow at Critical Pressure Differential, t/h	Max. Kv, m/hour³	F, cm²	Body Material, Steel	Working Medium	Мкр., N•m, not more than	Operating Stroke, mm	Full Stroke Rotation Number	Max. Pressure Differential, MPa	L, mm	H, mm	h, mm	D, mm	D1, mm	Electric Actuator Identification	N, kW	t of the Stroke, sec.	Weight without Electric Actuator, kg	Full Weight, kg	Figure	Diagram
1084-100-Э^{а}	100	37,3	280	-	15,7	4,0	20	Water	356,7	60	10,0	7	400	1180	1055	98	146	792-ЭР-0а	1,32	30	159	233	79	33
1084-100-Э^{а}-01	100	37,3	280	-	24,2	6,0	20	Water	356,7	60	10,0	7	400	1180	1055	98	146	792-ЭР-0а	1,32	30	159	233	79	33
1084-100-Э^{а}-02	100	37,3	280	-	36,3	9,5	20	Water	356,7	60	10,0	7	400	1180	1055	98	146	792-ЭР-0а	1,32	30	159	233	79	33
1084-100-Э^{а}-03	100	37,3	280	-	97,8	24,0	20	Water	356,7	60	10,0	7	400	1180	1055	98	146	792-ЭР-0а	1,32	30	159	233	79	33
1084-100-Э^{а}Ч	100	37,3	280	-	15,7	4,0	20	Water	356,7	60	10,0	7	400	1455	1330	98	146	ПЭМ-В35-1000-25-36У	2,2	24	170	257	79	33
1084-100-Э^{а}Ч-01	100	37,3	280	-	24,2	6,0	20	Water	356,7	60	10,0	7	400	1455	1330	98	146	ПЭМ-В35-1000-25-36У	2,2	24	170	257	79	33
1084-100-Э^{а}Ч-02	100	37,3	280	-	36,3	9,5	20	Water	356,7	60	10,0	7	400	1455	1330	98	146	ПЭМ-В35-1000-25-36У	2,2	24	170	257	79	33
1084-100-Э^{а}Ч-03	100	37,3	280	-	97,8	24,0	20	Water	356,7	60	10,0	7	400	1455	1330	98	146	ПЭМ-В35-1000-25-36У	2,2	24	170	257	79	33
995-150-Э^{а}	150	9,8	540	250,0	-	78,5	15Х1М1ФЛ	Steam	370,0	140	17,5	-	600	1715	1425	163	210	793-ЭР-0I	3,2	24	462	571	77	36
995-150-Э^{а}-01	150	9,8	540	102,0	-	37,8	15Х1М1ФЛ	Steam	370,0	140	17,5	-	600	1715	1425	163	210	793-ЭР-0I	3,2	24	462	571	77	36
995-150-Э^{а}-02	150	9,8	540	170,0	-	53,4	15Х1М1ФЛ	Steam	370,0	140	17,5	-	600	1715	1425	163	210	793-ЭР-0I	3,2	24	462	571	77	36
995-150-Э^{а}Ч	150	9,8	540	250,0	-	78,5	15Х1М1ФЛ	Steam	370,0	140	17,5	-	600	2030	1740	163	210	ПЭМ-В35-1000-25-36У	2,2	42	473	560	77	36
995-150-Э^{а}Ч-01	150	9,8	540	102,0	-	37,8	15Х1М1ФЛ	Steam	370,0	140	17,5	-	600	2030	1740	163	210	ПЭМ-В35-1000-25-36У	2,2	42	473	560	77	36
995-150-Э^{а}Ч-02	150	9,8	540	170,0	-	53,4	15Х1М1ФЛ	Steam	370,0	140	17,5	-	600	2030	1740	163	210	ПЭМ-В35-1000-25-36У	2,2	42	473	560	77	36
977-175-Э^{а}	175	13,7	560	302,6	-	78,5	15Х1М1ФЛ	Steam	507,0	140	17,5	-	600	1715	1425	156	235	793-ЭР-0I	3,2	24	462	571	77	36
977-175-Э^{а}-01	175	13,7	560	148,0	-	37,8	15Х1М1ФЛ	Steam	507,0	140	17,5	-	600	1715	1425	156	235	793-ЭР-0I	3,2	24	462	571	77	36
977-175-Э^{а}-02	175	13,7	560	240,0	-	53,4	15Х1М1ФЛ	Steam	507,0	140	17,5	-	600	1715	1425	156	235	793-ЭР-0I	3,2	24	462	571	77	36
977-175-Э^{а}Ч	175	13,7	560	302,6	-	78,5	15Х1М1ФЛ	Steam	507,0	140	17,5	-	600	2030	1740	156	235	ПЭМ-В35-1000-25-36У	2,2	42	473	560	77	36
977-175-Э^{а}Ч-01	175	13,7	560	148,0	-	37,8	15Х1М1ФЛ	Steam	507,0	140	17,5	-	600	2030	1740	156	235	ПЭМ-В35-1000-25-36У	2,2	42	473	560	77	36
977-175-Э^{а}Ч-02	175	13,7	560	240,0	-	53,4	15Х1М1ФЛ	Steam	507,0	140	17,5	-	600	2030	1740	156	235	ПЭМ-В35-1000-25-36У	2,2	42	473	560	77	36
993-175-Э	175	28,4	510	473,7	-	54	15Х1М1ФЛ	Steam	710,0	140	17,5	-	600	1715	1425	170	230	793-ЭР-0	3,2	47	455	563	77	41
993-175-Э-01	175	28,4	510	715,2	-	80	15Х1М1ФЛ	Steam	710,0	140	17,5	-	600	1715	1425	170	230	793-ЭР-0	3,2	47	455	563	77	41
993-175-ЭЧ	175	28,4	510	473,7	-	54	15Х1М1ФЛ	Steam	710,0	140	17,5	-	600	2030	1740	170	230	ПЭМ-В35-1000-25-36У	2,2	42	466	553	77	41
993-175-ЭЧ-01	175	28,4	510	715,2	-	80	15Х1М1ФЛ	Steam	710,0	140	17,5	-	600	2030	1740	170	230	ПЭМ-В35-1000-25-36У	2,2	42	466	553	77	41
976-175-Э^{б}	175	23,5	250	-	96,7	24	25Л	Water	287,0	140	17,5	3,9	600	1715	1425	182	230	793-ЭР-0-02	1,32	48	460	558	77	37
976-175-Э^{б}-01	175	23,5	250	-	217,7	53,4	25Л	Water	287,0	140	17,5	3,9	600	1715	1425	182	230	793-ЭР-0-02	1,32	48	460	558	77	37
976-175-Э^{б}Ч	175	23,5	250	-	96,7	24	25Л	Water	287,0	140	17,5	3,9	600	2030	1740	182	230	ПЭМ-В35-1000-25-36У	2,2	42	471	558	77	37
976-175-Э^{б}Ч-01	175	23,5	250	-	217,7	53,4	25Л	Water	287,0	140	17,5	3,9	600	2030	1740	182	230	ПЭМ-В35-1000-25-36У	2,2	42	471	558	77	37
870-200-Эм	200	37,3	280	-	84,7	20,5	25Л	Water	240,0	100	12,5	2,0	700	1405	1245	203	290	793-ЭР-0-04	1,7	34	395	496	80	38
870-200-ЭмЧ	200	37,3	280	-	84,7	20,5	25Л	Water	240,0	100	12,5	2,0	700	1700	1540	203	290	ПЭМ-В35-1000-25-36У	2,2	30	406	493	80	38
976-250-Э^{б}	250	23,5	250	-	191,5	47	25Л	Water	588,0	195	24,5	4,0	800	2155	1890	271	345	795-ЭР-0-V	3,2	71	1130	1308	81	39
976-250-Э^{б}-01	250	23,5	250	-	282,7	70	25Л	Water	588,0	195	24,5	4,0	800	2155	1890	271	345	795-ЭР-0-V	3,2	71	1130	1308	81	39
976-250-Э^{б}Ч	250	23,5	250	-	191,5	47	25Л	Water	588,0	195	24,5	4,0	800	2320	2055	271	345	ПЭМ-В65-1500-25-36У	4,0	59	1141	1240	81	39
976-250-Э^{б}Ч-01	250	23,5	250	-	282,7	70	25Л	Water	588,0	195	24,5	4,0	800	2320	2055	271	345	ПЭМ-В65-1500-25-36У	4,0	59	1141	1240	81	39
992-250-Э^{б}	250	37,3	280	-	242	60	25Л	Water	833,0	195	24,5	4,0	800	2155	1890	245	345	795-ЭР-0-V	3,2	69	1142	1320	81	39
992-250-Э^{б}Ч	250	37,3	280	-	242	60	25Л	Water	833,0	195	24,5	4,0	800	2320	2055	245	345	ПЭМ-В65-1500-25-36У	4,0	59	1359	1457	81	39
993-250-Э^{б}	250	28,4	510	1093,3	-	120	15Х1М1ФЛ	Steam	1627,0	160	20,0	-	800	2275	2010	249	345	876-Э-0-08	6,0	57	1249	1534	81	40
993-250-Э^{б}-01	250	28,4	510	1608,1	-	163	15Х1М1ФЛ	Steam	1627	200	25,0	-	800	2275	2010	249	345	876-Э-0-08	6,0	71	1249	1534	81	40
992-300-Э^{б}	300	37,3	280	-	463,7	115	25Л	Water	892,0	190	24,0	3,9	900	2160	1890	281	400	795-ЭР-0	4,25	65	1348	1531	81	42
992-300-Э^{б}-01	300	37,3	280	-	673	167	25Л	Water	892,0	200	25,0	3,9	900	2160	1890	281	400	795-ЭР-0	4,25	67	1345	1528	81	42
992-300-Э^{б}-02	300	37,3	280	-	1028	255	25Л	Water	892,0	210	26,0	3,9	900	2160	1890	281	400	795-ЭР-0	4,25	70	1342	1525	81	42
992-300-Э^{б}Ч	300	37,3	280	-	463,7	115	25Л	Water	892,0	190	24,0	3,9	900	2325	2060	281	400	ПЭМ-В65-1500-25-36У	4,0	58	1359	1457	81	42
992-300-Э^{б}Ч-01	300	37,3	280	-	673	167	25Л	Water	892,0	200	25,0	3,9	900	2325	2060	281	400	ПЭМ-В65-1500-25-36У	4,0	60	1356	1454	81	42
992-300-Э^{б}Ч-02	300	37,3	280	-	1028	255	25Л	Water	892,0	210	26,0	3,9	900	2325	2060	281	400	ПЭМ-В65-1500-25-36У	4,0	62	1353	1451	81	42
533-350-Э	350	4,0	545	547,5	-	490	15Х1М1ФЛ	Steam	510,0	250	10,5	-	850	1690	1445	345	390	793-ЭР-0I	3,2	15	917	1026	82	43
533-350-Э-01	350	4,0	545	547,5	-	490	15Х1М1ФЛ	Steam	510,0	250	21,0	-	850	1690	1445	345	390	793-ЭР-0	3,2	60	918	1026	82	43
533-350-ЭЧ	350	4,0	545	547,5	-	490	15Х1М1ФЛ	Steam	510,0	250	10,5	-	850	2064	1819	345	390	ПЭМ-В43-1000-50-36У	4,25	15	928	1025	82	43
533-350-ЭЧ-01	350	4,0	545	547,5	-	490	15Х1М1ФЛ	Steam	510,0	250	21,0	-	850	2019	1774	345	390	ПЭМ-В35-1000-25-36У	2,2	60	929	1016	82	43

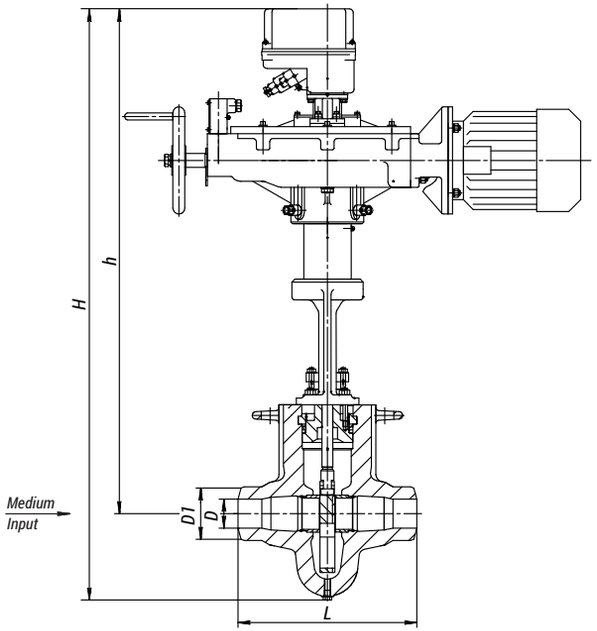

Figure 77
Slide Control Valve

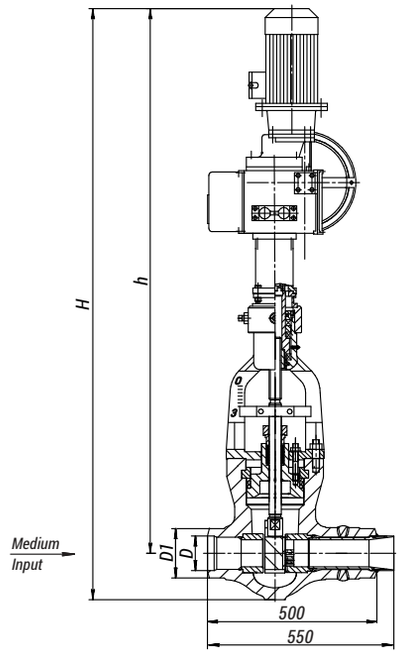

Figure 78
Slide Control Valve

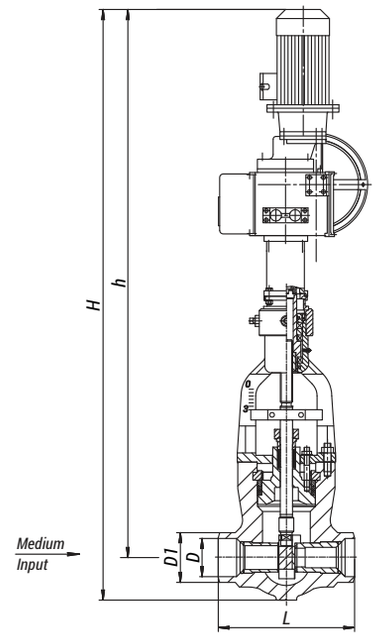

Figure 79
Slide Control Valve

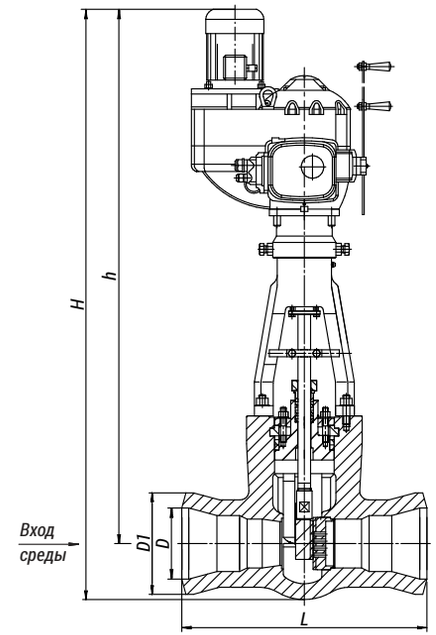

Figure 80
Slide Control Valve

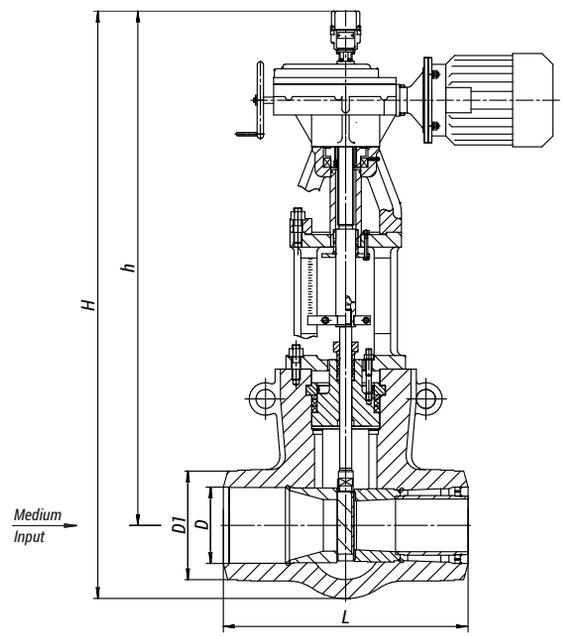

Figure 81
Slide Control Valve

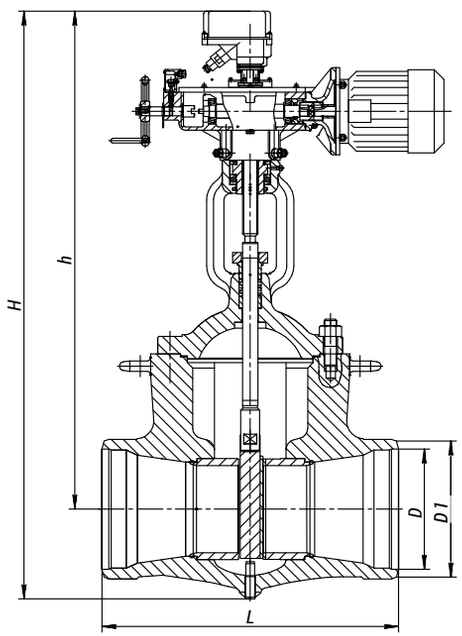

Figure 82
Slide Control Valve

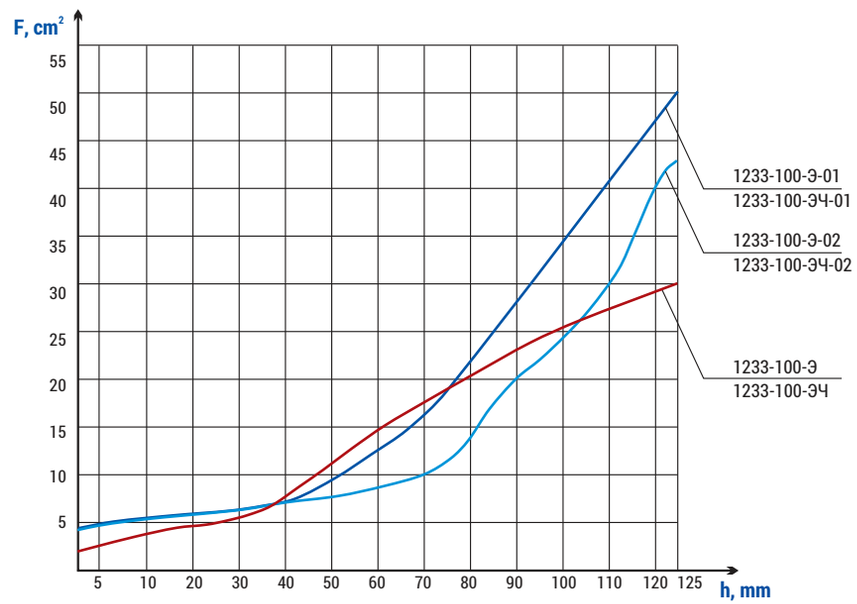

Diagram 32

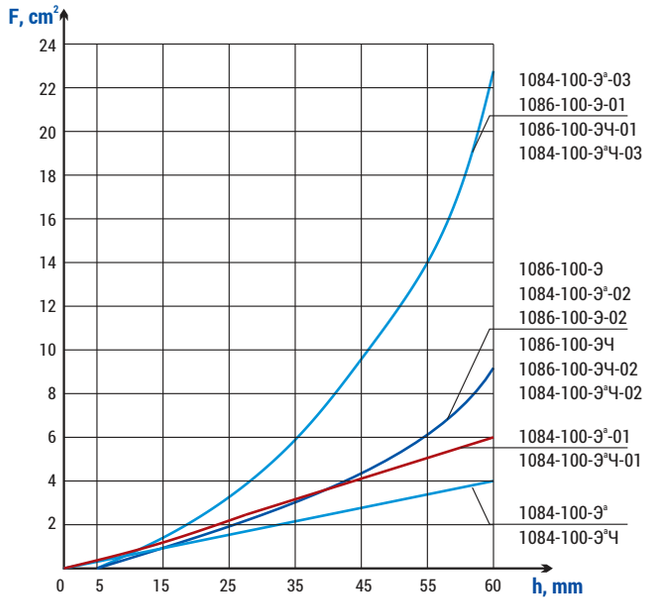

Diagram 33

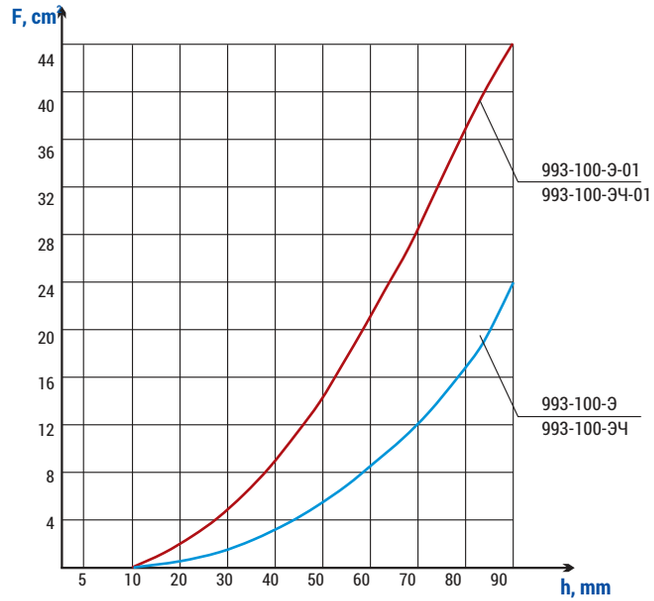

Diagram 34

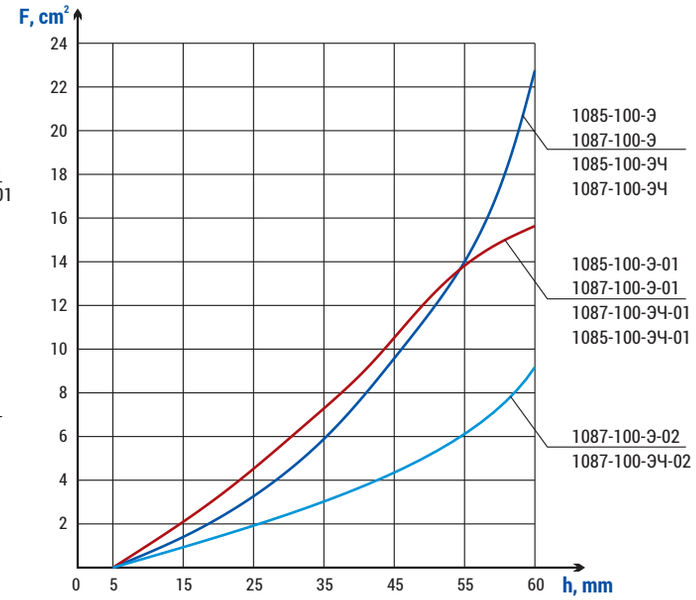

Diagram 35

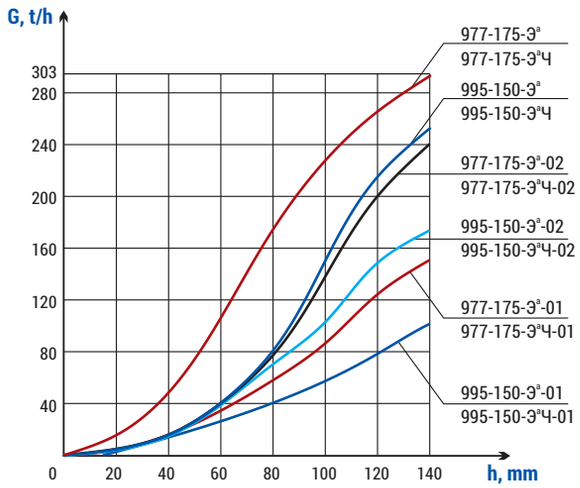

Diagram 36

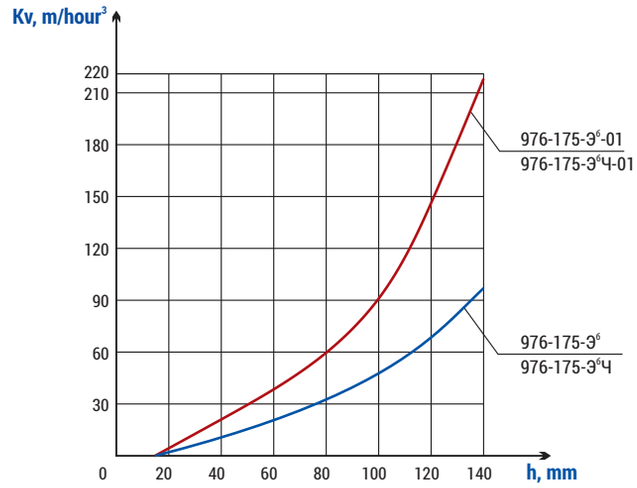

Diagram 37

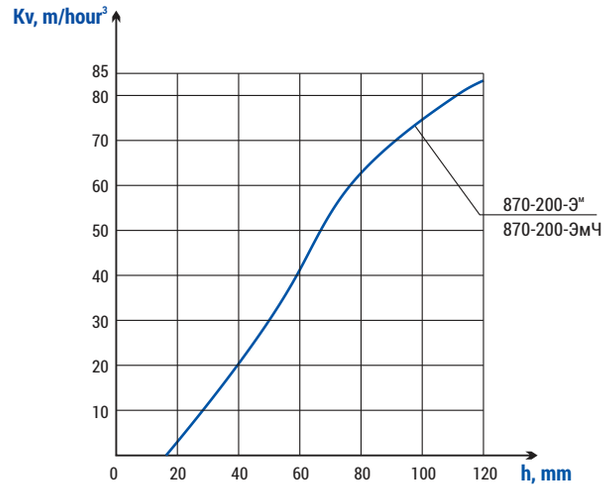

Diagram 38

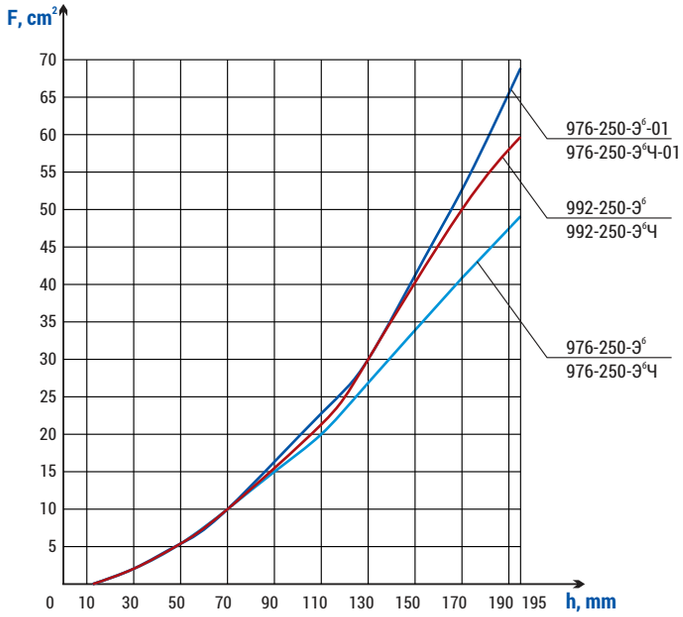

Diagram 39

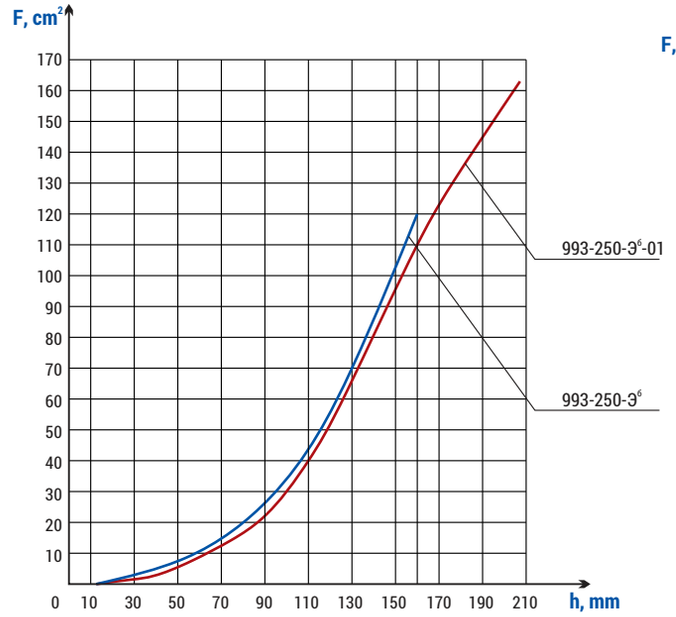

Diagram 40

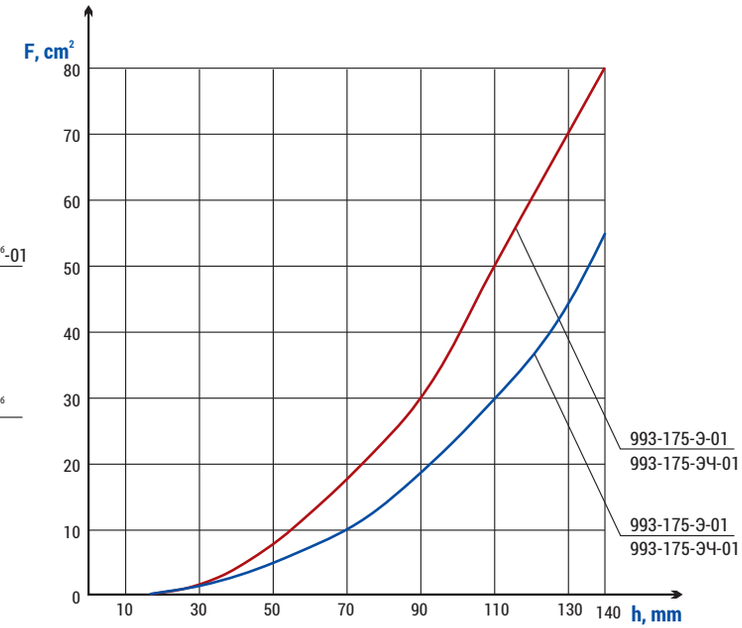

Diagram 41

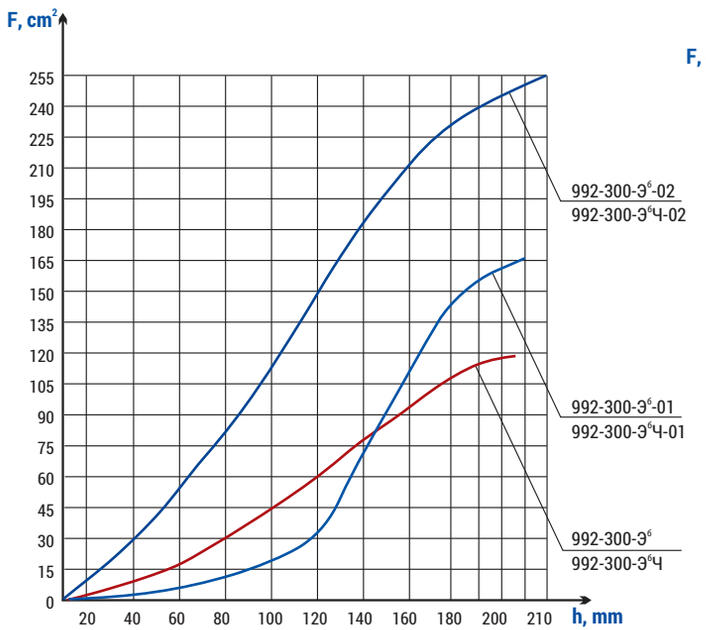

Diagram 42

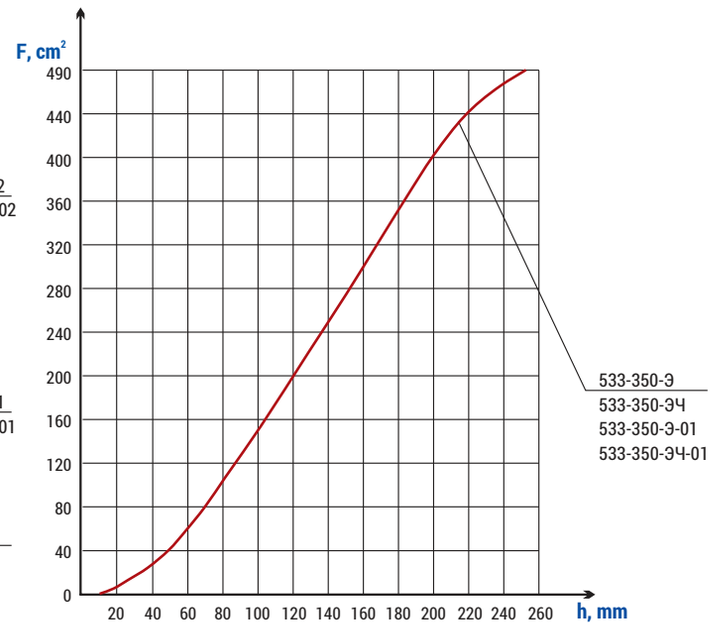

Diagram 43

Production according to TR 2913-001-15365247-2004

Throttle Globe Valves of Series 950

Purpose

The throttle globe valves of series 950 serve as controlled throttling devices of FRPRDS, which perform pressure throttling of the passed medium together with throttling devices sequentially installed after the valves.
They are intended for the live steam discharge in case of starting or stopping the power generating unit, in case of steam requirement per a turbine less than the evaporation capacity of the steam generator, excess steam pressure increase in the system and sudden reduction of the turbine load.

Technical specifications

Pipeline connection: welded connection.
Maximum pressure differential on the valve: critical.
Installation position: on horizontal pipeline sections with the medium direction to the rod through the lateral branch pipes.
Climatic version: У, УХЛ, ХЛ, Т according to GOST 15150-69.
Placement category: 2, 3 according to GOST 15150-69.

Control

The valve control is carried out with the help of a multi-turn built-in electric actuator.

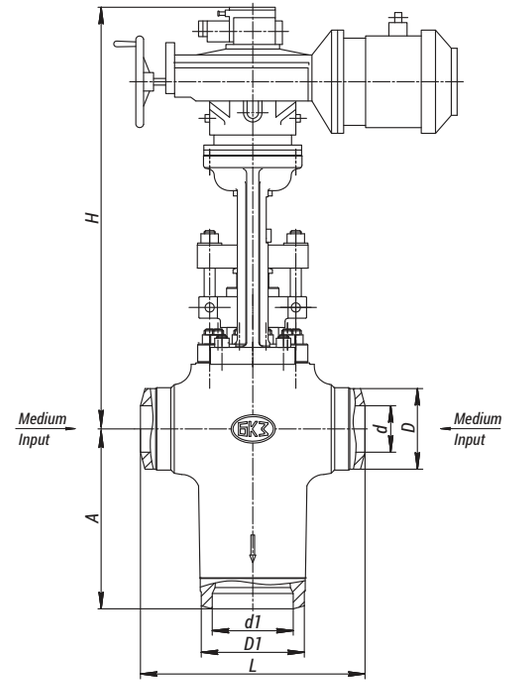

Figure 83
Throttle Globe Valve

Identification	DN, mm	Pp, MPa	Tmax of the Medium, °C	Body Material, Steel	Working Medium	Мкр., N•m, not more than	Full Stroke Rotation Number	Operating Stroke, mm	Max. Steam Flow at Critical Pressure Differential, Q, t/h	d, mm	d1, mm	D, mm	D1, mm	L, mm	H, mm	A, mm	Electric Actuator Identification	N, kW	t of the Stroke, sec.	Item Weight, kg	Figure
950-100/150-Э	100/150	25,0	545	15Х1М1Ф	Steam	1110	5	40	206	97	170	172	255	600	1320	450	794-ЭР-0[a]	3,2	14,0	700	83
950-100/150-Э-01	100/150	25,0	545	15Х1М1Ф	Steam	1110	5	40	120	97	170	172	255	600	1320	450	794-ЭР-0[a]	3,2	14,0	701	83
950-150/250-Э	150/250	25,0	545	15Х1М1Ф	Steam	2000	8	80	480...740	151	263	262	335	730	1415	585	876-Э-0-02	6,0	23,0	1412	83
950-150/250-Э-01	150/250	25,0	545	15Х1М1Ф	Steam	2000	8	80	480...740	151	263	262	335	730	1415	585	876-Э-0	11,8	11,5	1457	83
950-150/250-Э-02	150/250	25,0	545	15Х1М1Ф	Steam	2000	8	80	375...580	151	263	262	335	730	1415	585	876-Э-0-02	6,0	23,0	1413	83
950-200/250-Э	200/250	25,0	545	15Х1М1ФЛ	Steam	3096	8	80	1000	208	251	345	345	850	1485	600	797-ЭР-0	11,8	12,0	2361	83

Production according to TR 2913-001-15365247-2004

Pressure-Compensated Control Valves of Series 1416

Purpose

The pressure-compensated control valves of series 1416 are intended for the control of the feed water flow and installed in the power centers of steam generators.

- They are used as all-mode control bodies.
- The valves are designed for operation at the working medium pressure differentials up to 17,6 MPa.

Technical specifications

Pipeline connection: welded connection.
Installation position: on horizontal and vertical pipeline sections.
Climatic version: У, УХЛ, ХЛ, Т according to GOST 15150-69.
Placement category: 2, 3 according to GOST 15150-69.

Control

The valve control is carried out through the lever from the actuator of single-turn electric actuator (МЭО) or single-turn electric flanged actuator (МЭОФ) types.

Identification	DN, mm	Pp, MPa	Tmax of the Medium, °C	Body Material, Steel	Working Medium	Max. Kv, m/hour³	Мкр., N•m, not more than	Мкр., Nm, not more than	D, mm	D1, mm	L, mm	H, mm	A, mm	Electric Actuator Identification	N, kW	t of the Stroke, sec.	Weight without Electric Actuator, kg	Full Weight, kg	Figure	Diagram
1416-100-P	100	23,5	250	20	Water	95	630	17,6	109	146	400	864	137	МЭО-630/10-0,25У-92К	0,3	10	183	318	84	44
1416-100-P-01	100	23,5	250	20	Water	68,3	630	17,6	109	146	400	864	137	МЭО-630/10-0,25У-92К	0,3	10	183	318	84	44
1416-100-P-02	100	23,5	250	20	Water	38,5	630	17,6	109	146	400	864	137	МЭО-630/10-0,25У-92К	0,3	10	183	318	84	44
1416-100-Э	100	23,5	250	20	Water	95	1000	17,6	109	146	400	1316	137	МЭОФ-1000/25-0,25У-97К	0,29	20	128	198	85	44
1416-100-Э-01	100	23,5	250	20	Water	68,3	1000	17,6	109	146	400	1316	137	МЭОФ-1000/25-0,25У-97К	0,29	20	128	198	85	44
1416-100-Э-02	100	23,5	250	20	Water	38,5	1000	17,6	109	146	400	1316	137	МЭОФ-1000/25-0,25У-97К	0,29	20	128	198	85	44
1416-175-P	175	23,5	250	15ГС	Water	134	1600	17,6	182	230	650	1270	231	МЭО-1600/25-0,25У-92К	0,49	25	614	749	84	45
1416-175-P-01	175	23,5	250	15ГС	Water	99	1600	17,6	182	230	650	1270	231	МЭО-1600/25-0,25У-92К	0,49	25	614	749	84	45
1416-175-P-02	175	23,5	250	15ГС	Water	77	1600	17,6	182	230	650	1270	231	МЭО-1600/25-0,25У-92К	0,49	25	614	749	84	45
1416-175-Э	175	23,5	250	15ГС	Water	134	1600	17,6	182	230	650	1797	231	МЭОФ-1600/25-0,25У-96К	0,3	25	650	725	85	45
1416-175-Э-01	175	23,5	250	15ГС	Water	99	1600	17,6	182	230	650	1797	231	МЭОФ-1600/25-0,25У-96К	0,3	25	653	728	85	45
1416-175-Э-02	175	23,5	250	15ГС	Water	77	1600	17,6	182	230	650	1797	231	МЭОФ-1600/25-0,25У-96К	0,3	25	652	727	85	45
1416-225-P	225	23,5	250	15ГС	Water	217	1600	17,6	226	285	650	1431	245	МЭО-1600/25-0,25У-92К	0,49	25	953	1088	84	46
1416-225-P-01	225	23,5	250	15ГС	Water	146	1600	17,6	226	285	650	1431	245	МЭО-1600/25-0,25У-92К	0,49	25	953	1088	84	46
1416-225-P-02	225	23,5	250	15ГС	Water	125	1600	17,6	226	285	650	1431	245	МЭО-1600/25-0,25У-92К	0,49	25	953	1088	84	46
1416-225-P-03	225	23,5	250	15ГС	Water	77	1600	17,6	226	285	650	1431	245	МЭО-1600/25-0,25У-92К	0,49	25	953	1088	84	46
1416-225-P-04	225	23,5	250	15ГС	Water	95	1600	17,6	226	285	650	1431	245	МЭО-1600/25-0,25У-92К	0,49	25	953	1088	84	46
1416-225-Э	225	23,5	250	15ГС	Water	217	1600	17,6	226	285	650	1955	245	МЭОФ-1600/25-0,25У-96К	0,3	25	968	1092	85	46
1416-225-Э-01	225	23,5	250	15ГС	Water	146	1600	17,6	226	285	650	1955	245	МЭОФ-1600/25-0,25У-96К	0,3	25	968	1092	85	46
1416-225-Э-02	225	23,5	250	15ГС	Water	125	1600	17,6	226	285	650	1955	245	МЭОФ-1600/25-0,25У-96К	0,3	25	968	1092	85	46
1416-225-Э-03	225	23,5	250	15ГС	Water	77	1600	17,6	226	285	650	1955	245	МЭОФ-1600/25-0,25У-96К	0,3	25	968	1092	85	46
1416-225-Э-04	225	23,5	250	15ГС	Water	95	1600	17,6	226	285	650	1955	245	МЭОФ-1600/25-0,25У-96К	0,3	25	968	1092	85	46
1416-250-P	250	23,5	250	15ГС	Water	233	1600	17,6	271	340	650	1396	210	МЭО-1600/25-0,25У-92К	0,49	25	963	1098	84	47
1416-250-P-01	250	23,5	250	15ГС	Water	167	1600	17,6	271	340	650	1396	210	МЭО-1600/25-0,25У-92К	0,49	25	963	1098	84	47
1416-250-P-02	250	23,5	250	15ГС	Water	146	1600	17,6	271	340	650	1396	210	МЭО-1600/25-0,25У-92К	0,49	25	963	1098	84	47
1416-250-Э	250	23,5	250	15ГС	Water	233	1600	17,6	271	340	650	1920	210	МЭОФ-1600/25-0,25У-96К	0,3	25	1040	1164	85	47
1416-250-Э-01	250	23,5	250	15ГС	Water	167	1600	17,6	271	340	650	1920	210	МЭОФ-1600/25-0,25У-96К	0,3	25	1040	1164	85	47
1416-250-Э-02	250	23,5	250	15ГС	Water	146	1600	17,6	271	340	650	1920	210	МЭОФ-1600/25-0,25У-96К	0,3	25	1040	1164	85	47

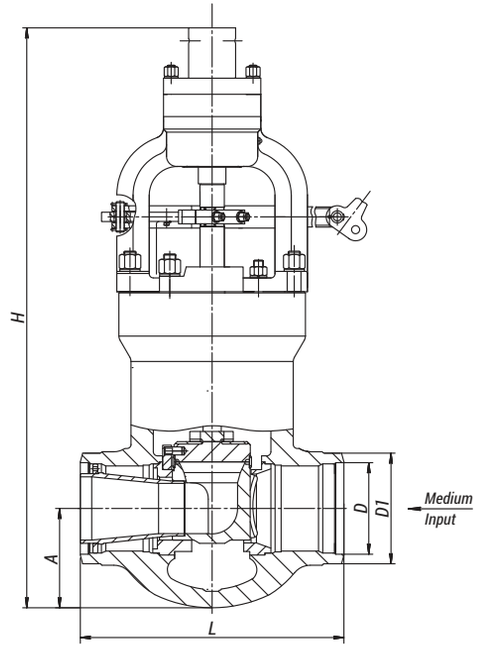

Figure 84
Pressure-Compensated Control Valve

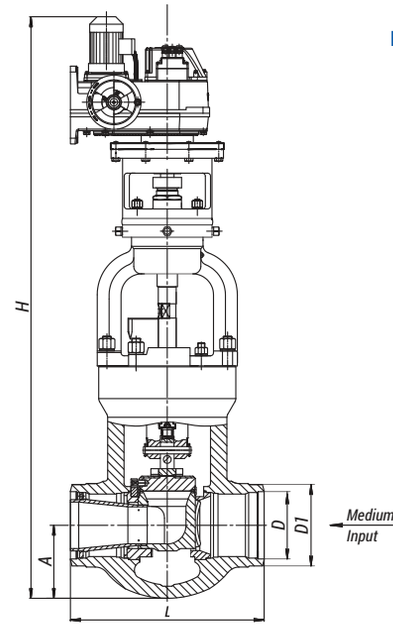

Figure 85
Pressure-Compensated Control Valve
with a Built-in Electric Actuator

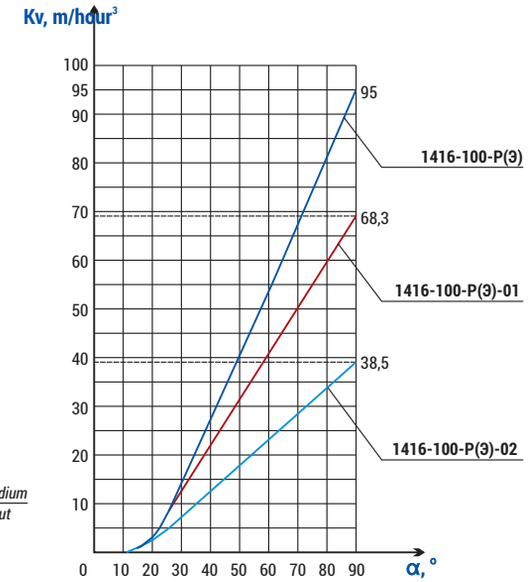

Diagram 44

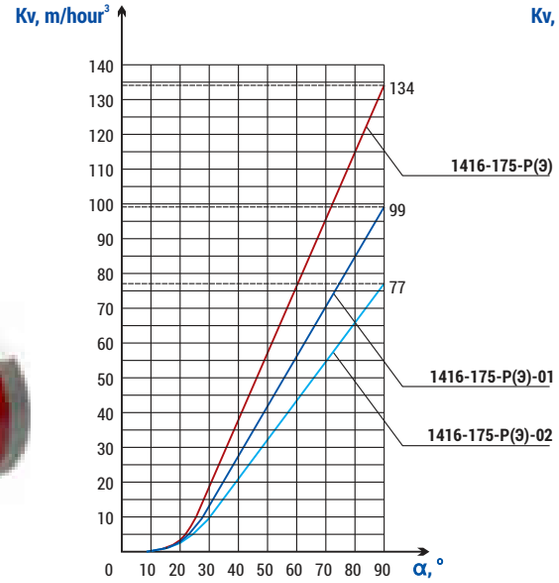

Diagram 45

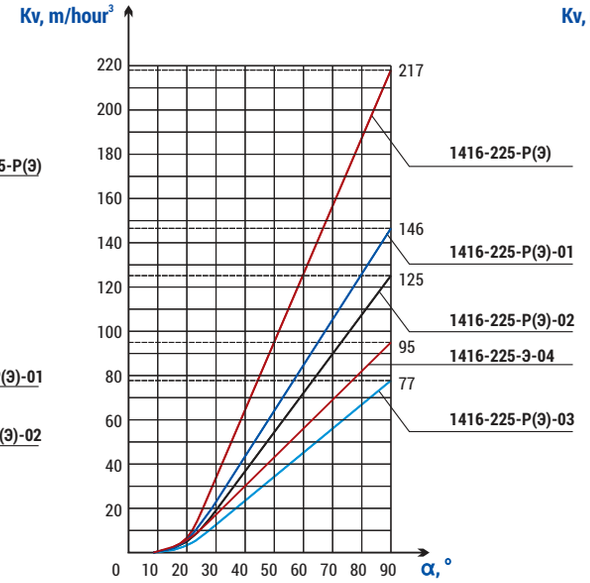

Diagram 46

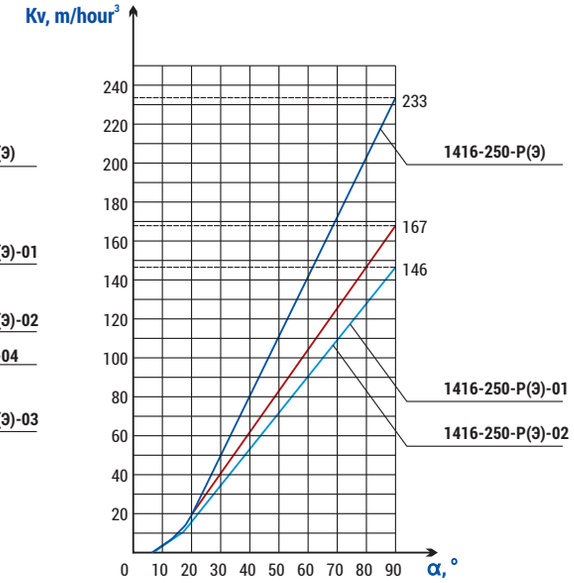

Diagram 47

Production according to TR 3740-002-15365247-2004

Pressure-Compensated Control Disc Valves of Type 21c

Purpose

The pressure-compensated control disc valves of type 21c are intended for the control of the feed water and steam flow.

- They are installed in the power centers of steam generators, PRDS and FRPRDS.
- The valves are used as all-mode control bodies.

Technical specifications

Pipeline connection: welded connection.
Installation position: on horizontal and vertical pipeline sections.
Climatic version: У, УХЛ, ХЛ, Т according to GOST 15150-69.
Placement category: 2, 3 according to GOST 15150-69.

Control

The valve control is carried out from the actuator of single-turn electric flanged actuator type (МЭОФ).

Identification	DN, мм	Pp, МПа	Tmax of the Medium, °C	Body Material, Steel	Working Medium	Max. Kv, m/hour³	Мкр., N•m, not more than	Макс. перепад давления, МПа	D, mm	D1, mm	L, mm	H, mm	A, mm	Electric Actuator Identification .	N, kW	t of the Stroke, sec.	Weight without Electric Actuator, kg	Full Weight, kg	Figure	Diagram
21c-100-1-Э	100	13,7	560	15Х1М1Ф	Steam	95	1000	Critical	94	146	400	1368	137	МЭОФ-1000/20-0,25У-96К	0,3	10	183	220	86	48
21c-100-1-Э-01	100	13,7	560	15Х1М1Ф	Steam	68,3	1000	Critical	94	146	400	1368	137	МЭОФ-1000/20-0,25У-96К	0,3	10	183	220	86	48
21c-100-1-Э-02	100	13,7	560	15Х1М1Ф	Steam	38,5	1000	Critical	94	146	400	1368	137	МЭОФ-1000/20-0,25У-96К	0,3	10	183	220	86	48
21c-100-2-Э	100	23,5	250	15ГС	Water	95	1000	17,6	109	146	400	1368	137	МЭОФ-1000/20-0,25У-96К	0,3	10	183	220	86	48
21c-100-2-Э-01	100	23,5	250	15ГС	Water	68,3	1000	17,6	109	146	400	1368	137	МЭОФ-1000/20-0,25У-96К	0,3	10	183	220	86	48
21c-100-2-Э-02	100	23,5	250	15ГС	Water	38,5	1000	17,6	109	146	400	1368	137	МЭОФ-1000/20-0,25У-96К	0,3	10	183	220	86	48
21c-100-3-Э	100	9,8	540	15Х1М1Ф	Steam	95	1000	Critical	112	146	400	1368	137	МЭОФ-1000/20-0,25У-96К	0,3	10	183	220	86	48
21c-100-3-Э-01	100	9,8	540	15Х1М1Ф	Steam	68,3	1000	Critical	112	146	400	1368	137	МЭОФ-1000/20-0,25У-96К	0,3	10	183	220	86	48
21c-100-3-Э-02	100	9,8	540	15Х1М1Ф	Steam	38,5	1000	Critical	112	146	400	1368	137	МЭОФ-1000/20-0,25У-96К	0,3	10	183	220	86	48
21c-100-4-Э	100	37,3	280	15ГС	Water	95	1000	17,6	98	146	400	1368	137	МЭОФ-1000/20-0,25У-96К	0,3	10	183	220	86	48
21c-100-4-Э-01	100	37,3	280	15ГС	Water	68,3	1000	17,6	98	146	400	1368	137	МЭОФ-1000/20-0,25У-96К	0,3	10	183	220	86	48
21c-100-4-Э-02	100	37,3	280	15ГС	Water	38,5	1000	17,6	98	146	400	1368	137	МЭОФ-1000/20-0,25У-96К	0,3	10	183	220	86	48
21c-175-1-Э	175	13,7	560	15Х1М1Ф	Steam	134	1600	Critical	156	230	650	1832	131	МЭОФ-1600/25-0,25У-96К	0,3	25	604	728	86	49
21c-175-1-Э-01	175	13,7	560	15Х1М1Ф	Steam	99	1600	Critical	156	230	650	1832	131	МЭОФ-1600/25-0,25У-96К	0,3	25	604	728	86	49
21c-175-1-Э-02	175	13,7	560	15Х1М1Ф	Steam	77	1600	Critical	156	230	650	1832	131	МЭОФ-1600/25-0,25У-96К	0,3	25	604	728	86	49
21c-175-2-Э	175	23,5	250	15ГС	Water	134	1600	17,6	182	230	650	1832	131	МЭОФ-1600/25-0,25У-96К	0,3	25	604	728	86	49
21c-175-2-Э-01	175	23,5	250	15ГС	Water	99	1600	17,6	182	230	650	1832	131	МЭОФ-1600/25-0,25У-96К	0,3	25	604	728	86	49
21c-175-2-Э-02	175	23,5	250	15ГС	Water	77	1600	17,6	182	230	650	1832	131	МЭОФ-1600/25-0,25У-96К	0,3	25	604	728	86	49
21c-225-2-Э	225	23,5	250	15ГС	Water	217	1600	17,6	226	285	650	2540	245	МЭОФ-1600/25-0,25У-96К	0,3	25	958	992	86	50
21c-225-2-Э-01	225	23,5	250	15ГС	Water	146	1600	17,6	226	285	650	2540	245	МЭОФ-1600/25-0,25У-96К	0,3	25	958	992	86	50
21c-225-2-Э-02	225	23,5	250	15ГС	Water	125	1600	17,6	226	285	650	2540	245	МЭОФ-1600/25-0,25У-96К	0,3	25	958	992	86	50
21c-225-2-Э-03	225	23,5	250	15ГС	Water	77	1600	17,6	226	285	650	2540	245	МЭОФ-1600/25-0,25У-96К	0,3	25	958	992	86	50
21c-225-2-Э-04	225	23,5	250	15ГС	Water	95	1600	17,6	226	285	650	2540	245	МЭОФ-1600/25-0,25У-96К	0,3	25	958	992	86	50
21c-225-3-Э	225	9,8	540	15Х1М1Ф	Steam	217	1600	Critical	230	285	650	2540	245	МЭОФ-1600/25-0,25У-96К	0,3	25	958	992	86	50
21c-225-3-Э-01	225	9,8	540	15Х1М1Ф	Steam	146	1600	Critical	230	285	650	2540	245	МЭОФ-1600/25-0,25У-96К	0,3	25	958	992	86	50
21c-225-3-Э-02	225	9,8	540	15Х1М1Ф	Steam	125	1600	Critical	230	285	650	2540	245	МЭОФ-1600/25-0,25У-96К	0,3	25	958	992	86	50
21c-225-3-Э-03	225	9,8	540	15Х1М1Ф	Steam	77	1600	Critical	230	285	650	2540	245	МЭОФ-1600/25-0,25У-96К	0,3	25	958	992	86	50
21c-225-3-Э-04	225	9,8	540	15Х1М1Ф	Steam	95	1600	Critical	230	285	650	2540	245	МЭОФ-1600/25-0,25У-96К	0,3	25	958	992	86	50
21c-250-2-Э	250	23,5	250	15ГС	Water	233	1600	17,6	271	340	650	2274	210	МЭОФ-1600/25-0,25У-96К	0,3	25	940	1064	86	51
21c-250-2-Э-01	250	23,5	250	15ГС	Water	167	1600	17,6	271	340	650	2274	210	МЭОФ-1600/25-0,25У-96К	0,3	25	940	1064	86	51
21c-250-2-Э-02	250	23,5	250	15ГС	Water	146	1600	17,6	271	340	650	2274	210	МЭОФ-1600/25-0,25У-96К	0,3	25	940	1064	86	51

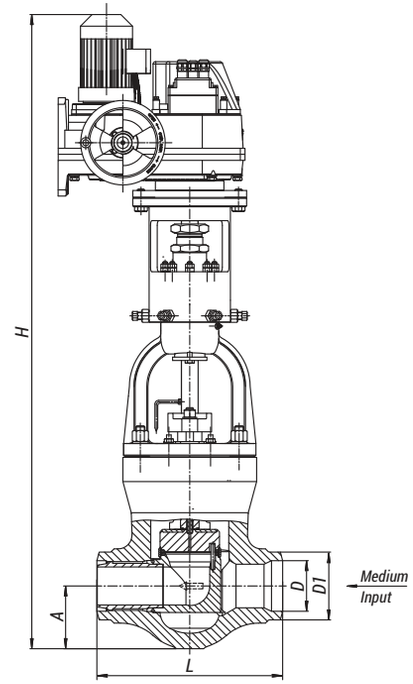

Figure 86
Pressure-Compensated Control Valve

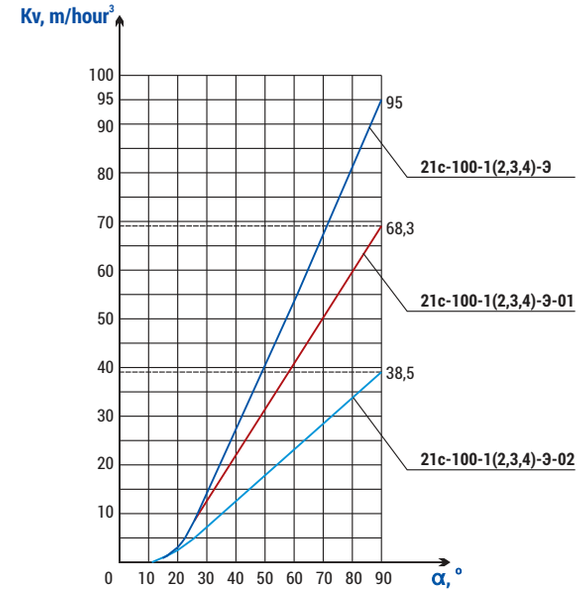

Diagram 48

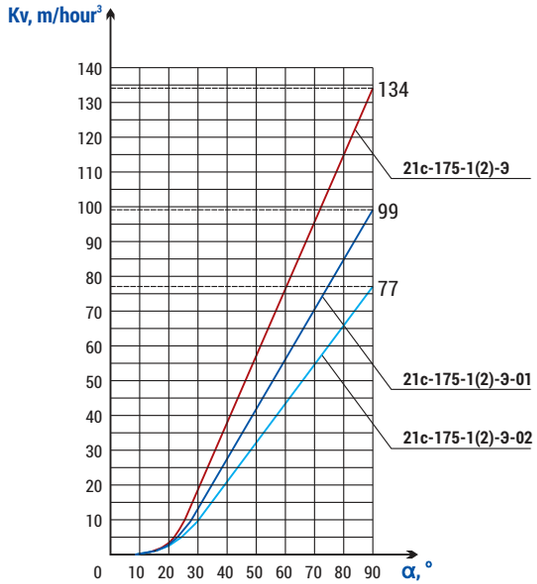

Diagram 49

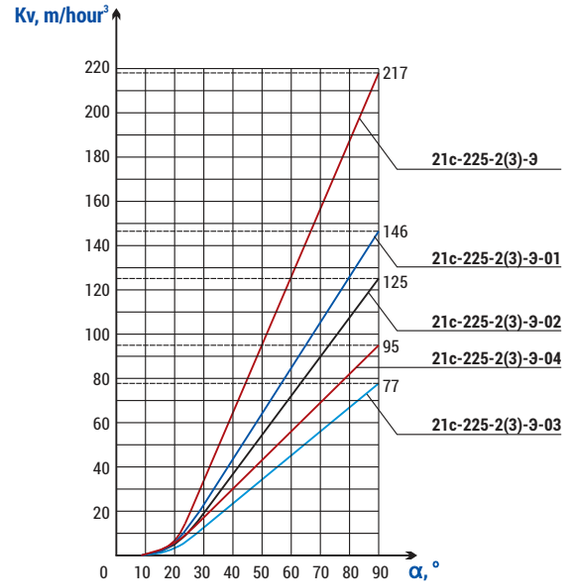

Diagram 50

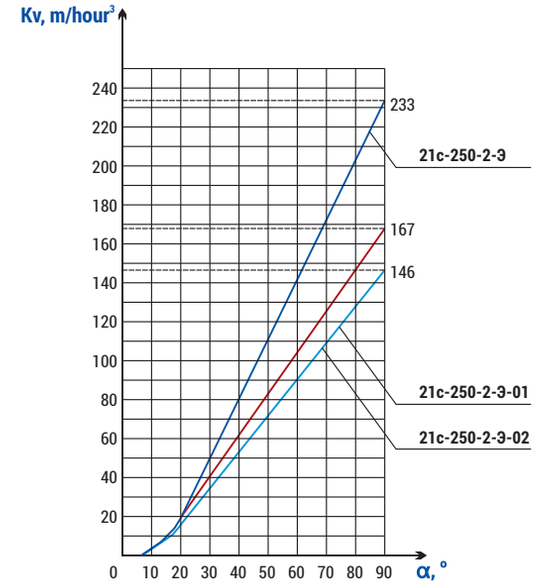

Diagram 51

Production according to TR 2913-001-15365247-2004

Temperature Control Process Disc Valves DN 20-65 of Type 22c

Purpose

The temperature control process disc valves DN 20-65 of type 22c are intended:

- for the steam temperature control in the boiler circuit as injection valves;
- for the reduced steam temperature control in DS, PRS, FRPRDS of power generating units and other pipelines, as well as on continuous blowdown pipelines.

Technical specifications

Pipeline connection: welded connection.
Climatic version: У, УХЛ, Т according to GOST 15150-69.
Placement category: 3, 4, 5 according to GOST 15150-69.
Installation position on the pipeline: horizontal.
Working medium supply direction: to the seat. According to the arrow on the body.
Gate sealability: class IV GOST 9544-2015.

Control

The control is carried out through:

- built-in electric actuators of single-turn electric flanged actuator type (МЭОФ) manufactured by ABS ZEIM Automation, JSC, Cheboksary;
- electric actuators of other manufacturers with standard connection units.

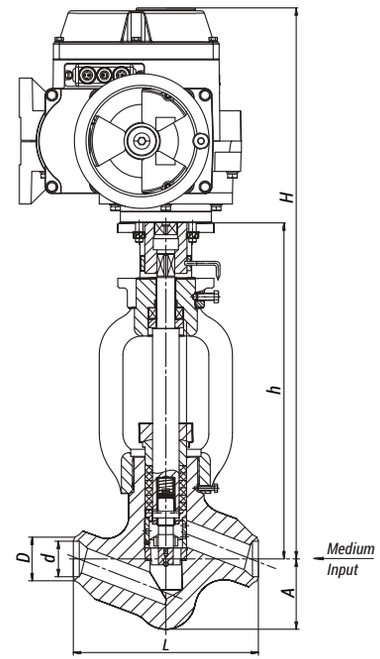

Figure 87
Temperature Control Valve of Type 22c

Identification	DN, mm	Pp, MPa	Tmax of the Medium, °C	Body Material, Steel	Working Medium	Kv, m /hour³	Fc, cm²	Max. Pressure Differential, MPa	Мкр., Nm, not more than	Spool Operating Stroke, Degrees	L, mm	H, mm	h, mm	d, mm	D, mm	A, mm	Electric Actuator Identification	N, kW	Full Opening (Closing) Time, sec.	Weight without Electric Actuator, kg	Full Weight, kg	Figure
22c-20-1-Э	20	25 ,0	545	12Х1МФ	Steam			7 ,0	250	90	250	740	450	20	32	95	МЭОФ-250/25-0,25У-99К	0,25	25	45	69	87
22c-20-2-Э	20	37,3	280	20	Water	by	by	7 ,0	250	90	250	740	450	20	32	95	МЭОФ-250/25-0,25У-99К	0,25	25	45	69	87
22c-32-1-Э	32	25,0	545	12Х1МФ	Steam	customer's	customer's	7 ,0	250	90	250	740	450	31	57	95	МЭОФ-250/25-0,25У-99К	0,25	25	45	69	87
22c-40-2-Э	40	3 ,3	280	20	Water	request	request	7 ,0	250	90	250	740	450	39	57	95	МЭОФ-250/25-0,25У-99К	0,25	25	45	69	87
22c-50-1-Э	50	13,7	560	12Х1МФ	Steam	from 0,2	from 0,05	7 ,0	250	90	250	740	450	50	76	95	МЭОФ-250/25-0,25У-99К	0,25	25	45	69	87
22c-50-2-Э	50	23,5	250	20	Water	to 14,6	to 4,46	7 ,0	250	90	250	740	450	49	60	95	МЭОФ-250/25-0,25У-99К	0,25	25	45	69	87
22c-65-1-Э	65	9,8	540	12Х1МФ	Steam			7 ,0	250	90	250	740	450	62	76	95	МЭОФ-250/25-0,25У-99К	0,25	25	45	69	87
22c-65-2-Э	65	23,5	250	20	Water			7 ,0	250	90	250	740	450	58	76	95	МЭОФ-250/25-0,25У-99К	0,25	25	45	69	87

* An example is given in the table. Boring of branch pipes is carried out to fit the size of the pipeline specified in the customer's specifications.

Production according to TR 3740-002-15365247-2004

Pressure-Compensated Control Disc Valves DN 80-200 of Type 23c

Purpose

The pressure-compensated control disc valves DN 80-200 of type 23c are intended for the control of the working medium flow or pressure.

- The medium flow through the valve is regulated by means of changing the area of passage section, which is achieved when turning the spool with regard to the seat.
- They are not used as shutoff devices.

Technical specifications

Pipeline connection: welded connection.
Climatic version: У, УХЛ, ХЛ, Т according to GOST 15150-69.
Placement category: 3, 4, 5 according to GOST 15150-69.
Installation position on the pipeline: horizontal, vertical.
Working medium supply direction: to the seat. According to the arrow on the body.
Gate sealability: class IV GOST 9544-2015.

Control

The control is carried out through:

- built-in electric actuators of single-turn electric flanged actuator (МЭОФ) type manufactured by ABS ZEIM Automation, OJSC, Cheboksary;
- electric actuators of other manufacturers with standard connection units.

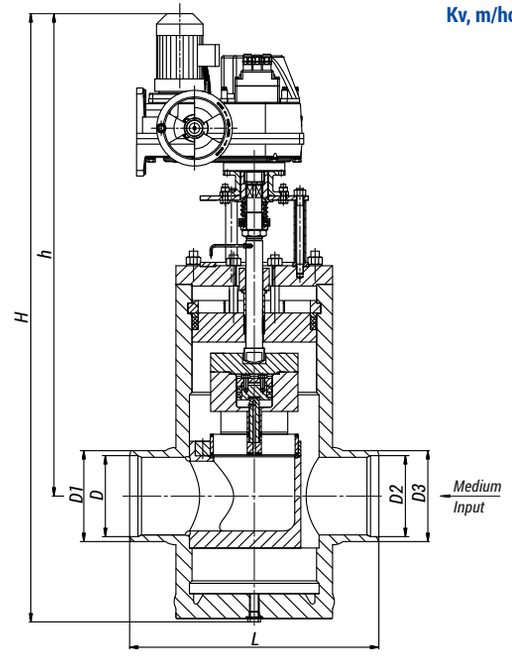

Figure 88
Control Valve of Type 23c

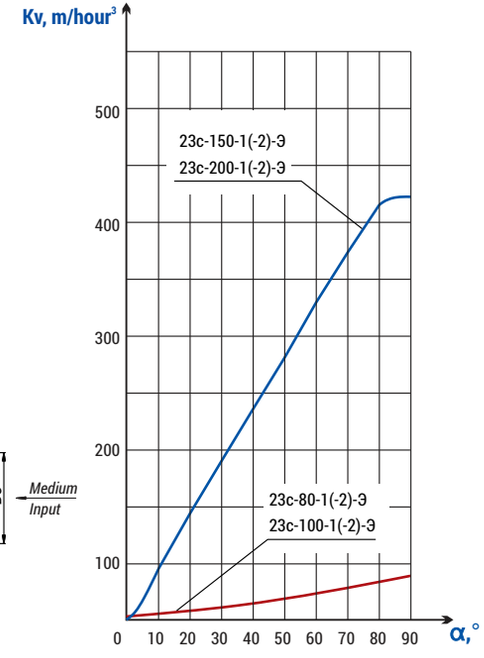

Diagram 52
Throughput capability dependence on the turning angle of the spool

Identification	DN, mm	PN, MPa	Tmax of the Medium, °C	Body Material, Steel	Working Medium	Inlet/Outlet Diameter	Kv, m/hour³	Fc, cm²	Mкр., N•m, not more than	L, mm	H, mm	h, mm	D, mm	D1, mm	D2, mm	D3, mm	Electric Actuator Identification	N, kW	Full Opening (Closing) Time, sec.	Weight without Electric Actuator, kg	Full Weight, kg	Figure	Diagram
23c-80-1-Э	80	10	450	20	Water-steam	80/80	64,5	21	250	430	975	757	77	90	77	90	МЭОФ-250/25-0,25У-99К	0,25	25	69	109	88	52
23c-80-2-Э	80	6,3	425	20	Water-steam	80/80	64,5	21	250	430	975	757	81	90	81	90	МЭОФ-250/25-0,25У-99К	0,25	25	69	109	88	52
23c-100-1-Э	100	10	450	20	Water-steam	100/100	64,5	21	250	430	975	757	93	108	93	108	МЭОФ-250/25-0,25У-99К	0,25	25	74	114	88	52
23c-100-2-Э	100	6,3	425	20	Water-steam	100/100	64,5	21	250	430	975	757	97	108	97	108	МЭОФ-250/25-0,25У-99К	0,25	25	74	114	88	52
23c-150-1-Э	150	10	450	20	Water-steam	150/150	354	119,65	1000	600	1465	1162	142	159	142	159	МЭОФ-1000/25-025У-97К	0,25	25	498	540	88	52
23c-150-2-Э	150	6,3	425	20	Water-steam	150/150	354	119,65	1000	600	1465	1162	147	159	147	159	МЭОФ-1000/25-025У-97К	0,25	25	498	540	88	52
23c-200-1-Э	200	10	450	20	Water-steam	200/200	354	119,65	1000	600	1465	1162	195	219	195	219	МЭОФ-1000/25-025У-97К	0,25	25	508	550	88	52
23c-200-2-Э	200	6,3	425	20	Water-steam	200/200	354	119,65	1000	600	1465	1162	203	219	203	219	МЭОФ-1000/25-025У-97К	0,25	25	508	550	88	52

* An example is given in the table. Boring of branch pipes is carried out to fit the size of the pipeline specified in the customer's specifications.

Production according to TR 2913-001-15365247-2004

Temperature Control Angle Disc Valves DN 20-65 of Type 24c

Purpose

The temperature control angle disc valves DN 20-65 of type 24c are intended for the steam temperature control.
They are used for the control of steam superheating temperature on boilers, reduced steam temperature in DS, PRDS, FRPRDS of power generating units and other pipelines, as well as on continuous blowdown pipelines.

Technical specifications

Pipeline connection: welded connection.
Climatic version: У, УХЛ, ХЛ, Т according to GOST 15150-69.
Placement category: 3, 4, 5 according to GOST 15150-69.
Installation position on the pipeline: horizontal.
Working medium supply direction: to the seat. According to the arrow on the body.
Gate sealability: class IV GOST 9544-2015.

Control

The control is carried out through:

- built-in electric actuators of single-turn electric flanged actuator type (МЭОФ) manufactured by ABS ZEIM Automation, OJSC, Cheboksary;
- electric actuators of other manufacturers with standard connection units.

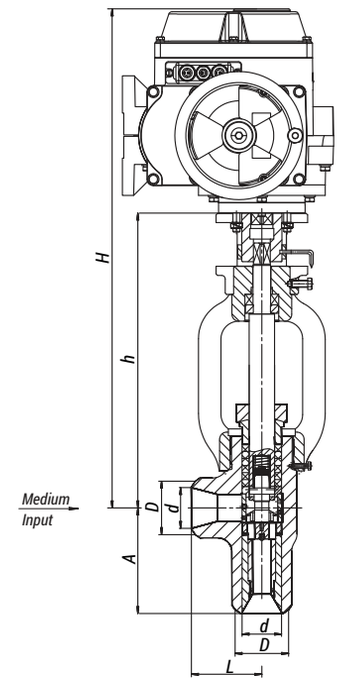

Рисунок 89
Temperature Control Valve of Type 24c

Identification	DN, mm	Pp, MPa	Tmax of the Medium, °C	Body Material, Steel	Working Medium	Kv, m/hour³	Fc, cm²	Max. Pressure Differential, MPa	Мкр., N•m, not more than	Spool Operating Stroke, Degrees	L, mm	H, mm	h, mm	d, mm	D, mm	A, mm	Electric Actuator Identification	N, kW	Full Opening (Closing) Time, sec.	Weight without Electric Actuator, kg	Full Weight, kg	Figure
24c-20-Э	20	37,3	280	20	Water	by	by	7,0	250	90	120	650	335	20	32	185	МЭОФ-250/25-0,25У-99К	0,25	25	45	69	89
24c-32-Э	32	37,3	280	20	Water	customer's	customer's	7,0	250	90	120	650	335	32	42	185	МЭОФ-250/25-0,25У-99К	0,25	25	45	69	89
24c-40-Э	40	37,3	280	20	Water	request	request	7,0	250	90	120	650	335	39	57	185	МЭОФ-250/25-0,25У-99К	0,25	25	45	69	89
24c-50-Э	50	37,3	280	20	Water	from 0,2	from 0,05	7,0	250	90	120	650	335	49	60	185	МЭОФ-250/25-0,25У-99К	0,25	25	45	69	89
24c-65-Э	65	37,3	280	20	Water	to 14,6	to 4,46	7,0	250	90	120	650	335	61	75	185	МЭОФ-250/25-0,25У-99К	0,25	25	45	69	89

* An example is given in the table. Boring of branch pipes is carried out to fit the size of the pipeline specified in the customer's specifications.

Production according to TR 3740-002-15365247-2004

Control Valves with Butterfly Dampers of Type 12c

Purpose

The control valves with butterfly dampers of type 12c are intended for the flow control of water steam, gas and air.

- The control is carried out by means of changing the area of passage section between the body and the butterfly damper when turning it.
- The full opening of the valve corresponds to the lever turning by an angle of 75 from the closed position.

Control

The valves are controlled through a quarter-turn actuator with a current position sensor of single-turn electric actuator (МЭО) and single-turn electric flanged actuator (МЭОФ) types (ABS ZEIM Automation, OJSC, Cheboksary) etc.

Technical specifications

Pipeline connection: welded connection.
The maximum pressure differential on the valve is limited.
Installation position: on horizontal and vertical pipeline sections.
Climatic version: У, УХЛ, ХЛ, Т according to GOST 15150-69.
Placement category: 2, 3 according to GOST 15150-69.

Rotary Disc Valves of Type 12c

Purpose

The rotary disc valves of type 12c are intended for the flow control of air and compatible stripped gases in the gas and air lines of the boiler unit.

Control

The control is carried out through changing the area of passage section when turning the disc with the help of:

- an actuator of single-turn electric flanged actuator (МЭОФ) type installed on the top trunnion;
- an actuator of single-turn electric actuator (МЭО) type through the lever.

The full opening of the valve corresponds to the disc turning by an angle of 90 from the closed position.

Technical specifications

Pipeline connection: flanged connection.
Installation position: on horizontal and vertical pipeline sections.
Climatic version: У, УХЛ, ХЛ, Т according to GOST 15150-69.
Placement category: 2, 3 according to GOST 15150-69.

Control Valves with Butterfly Dampers of Type 12c

Identification	DN, mm	PN, MPa	Tmax of the Medium, °C	Body Material, Steel	Working Medium	Max. Kv, m/hour³	Мкр., N•m, not more than	Max. Pressure Differential, MPa	Full Stroke Rotation Number	F, cm²	L, mm	H, mm	h, mm	d, mm	D, mm	D1, mm	D2, mm	n	Electric Actuator Identification	N, kW	t of the Stroke, sec.	Weight without Electric Actuator, kg	Full Weight with Electric Actuator, kg	Figure	Diagram
12c-1	400	6,3	425	20	Steam	8750	630	0,25	0,25	965	400	880	-	-	380	401	426	-	МЭО-630/25-0,25У-92К	0,2	25	135	209	90	53
12c-1-1	450	2,75*	340	20	Steam	10400	630	0,25	0,25	1290	400	920	-	-	430	437	465	-	МЭО-630/25-0,25У-92К	0,2	25	126	200	90	54
12c-2-5	400	2,5	425	20	Steam	1965	630	0,25	0,25	390	400	830	-	-	350	401	426	-	МЭО-630/25-0,25У-92К	0,2	25	181	255	90	55
12c-5-5	700	2,5	300	09Г2С	Steam	18500	1600	0,4	0,25	3150	600	1148	-	-	700	704	720	-	МЭО-4000/63-0,25У-97К	0,32	63	295	565	90	57
12c-3-1	50	0,1	400	09Г2С	Air, gases	95	50	-	0,25	12	38	-	-	-	-	-	-	-	МЭО-40/25-0,25У-99К	0,095	25	4,5	12,5	91	58
12c-3-2	100	0,1	400	09Г2С	Air, gases	350	50	-	0,25	54,5	58	356	206	18	100	170	152	2	МЭО-40/25-0,25У-99К	0,095	25	10	18	92	56
12c-3-3	200	0,1	400	09Г2С	Air, gases	1920	140	-	0,25	250	58	507	293	18	200	280	252	2	МЭО-100/25-0,25У-99К	0,17	25	17,6	45	92	56
12c-3-4	300	0,1	400	09Г2С	Air, gases	4300	140	-	0,25	615	58	617	353	22	300	395	365	2	МЭО-100/25-0,25У-99К	0,17	25	29	56,5	92	56
12c-4-2Э	100	0,063	400	09Г2С	Air, gases	350	20	-	0,25	54,5	58	586	438	18	100	170	152	2	МЭОФ-40/25-0,25У-96К	0,11	25	13	21	93	56
12c-4-3Э	200	0,063	400	09Г2С	Air, gases	1920	30	-	0,25	250	58	714	500	18	200	280	252	2	МЭОФ-40/25-0,25У-96К	0,11	25	21	29	93	56
12c-4-4Э	300	0,063	400	09Г2С	Air, gases	4300	30	-	0,25	615	58	802	559	22	300	395	365	2	МЭОФ-40/25-0,25У-96К	0,11	25	32,5	41	93	56

** - Pressure, P*

Rotary Disc Valves of Type 12c

Identification	DN, mm	PN, MPa	Tmax of the Medium, °C	Body Material, Steel	Working Medium	Max. Kv, m/hour³	Мкр., N•m, not more than	Full Stroke Rotation Number	F, cm²	L, mm	H, mm	d, mm	d1, mm	D, mm	D1, mm	D2, mm	n	Electric Actuator Identification	N, kW	t of the Stroke, sec.	Weight without Electric Actuator, kg	Full Weight with Electric Actuator, kg	Figure
12c-8-4	300	0,1	400	09Г2С	Air, gases	4700	100	0,25	640	180	568	18	30	310	385	430	10	МЭО-100/25-0,25У-99К	0,17	25	55	82,5	94
12c-8-4Э	300	0,1	400	09Г2С	Air, gases	4700	100	0,25	640	180	874	18	30	310	385	430	10	МЭОФ-250/25-0,25У-99К	0,25	25	90	118	95
12c-8-5	400	0,1	400	09Г2С	Air, gases	8200	100	0,25	1146	180	668	18	30	410	490	535	12	МЭО-100/25-0,25У-99К	0,17	25	70	97,5	94
12c-8-5Э	400	0,1	400	09Г2С	Air, gases	8200	100	0,25	1146	180	977	18	30	410	490	535	12	МЭОФ-250/25-0,25У-99К	0,25	25	105	133	95
12c-8-6	500	0,1	400	09Г2С	Air, gases	12800	250	0,25	1800	180	768	18	30	510	600	645	16	МЭО-250/25-0,25У-99К	0,25	25	90	117,5	94
12c-8-6Э	500	0,1	400	09Г2С	Air, gases	12800	250	0,25	1800	180	1084	18	30	510	600	645	16	МЭОФ-250/25-0,25У-99К	0,25	25	125	153	95
12c-8-7	600	0,1	400	09Г2С	Air, gases	22500	250	0,25	2640	180	868	18	30	610	700	745	16	МЭО-250/25-0,25У-99К	0,25	25	105	132,5	94
12c-8-7Э	600	0,1	400	09Г2С	Air, gases	22500	250	0,25	2640	180	1180	18	30	610	700	745	16	МЭОФ-250/25-0,25У-99К	0,25	25	140	168	95
12c-8-8	700	0,1	400	09Г2С	Air, gases	31000	630	0,25	3630	220	983	22	40	710	800	850	16	МЭО-630/25-0,25У-92К	0,20	25	135	209	94
12c-8-8Э	700	0,1	400	09Г2С	Air, gases	31000	630	0,25	3630	220	1483	22	40	710	800	850	16	МЭОФ-630/15-0,25У-97К	0,20	15	215	282	95
12c-8-9	800	0,1	400	09Г2С	Air, gases	40000	630	0,25	4780	220	1083	22	40	810	900	950	18	МЭО-630/25-0,25У-92К	0,20	25	165	239	94
12c-8-9Э	800	0,1	400	09Г2С	Air, gases	40000	630	0,25	4780	220	1585	22	40	810	900	950	18	МЭОФ-630/15-0,25У-97К	0,20	15	245	312	95
12c-8-10	900	0,1	400	09Г2С	Air, gases	51500	630	0,25	6080	220	1183	22	40	910	1000	1050	20	МЭО-630/25-0,25У-92К	0,20	25	190	264	94
12c-8-10Э	900	0,1	400	09Г2С	Air, gases	51500	630	0,25	6080	220	1685	22	40	910	1000	1050	20	МЭОФ-630/15-0,25У-97К	0,20	15	270	337	95
12c-8-11	1000	0,1	400	09Г2С	Air, gases	63000	630	0,25	7540	220	1283	22	40	1010	1100	1150	22	МЭО-630/25-0,25У-92К	0,20	25	215	289	94
12c-8-11Э	1000	0,1	400	09Г2С	Air, gases	63000	630	0,25	7540	220	1785	22	40	1010	1100	1150	22	МЭОФ-630/15-0,25У-97К	0,20	15	300	367	95
12c-8-12	1100	0,1	400	09Г2С	Air, gases	81500	1600	0,25	9160	240	1383	22	50	1110	1200	1250	24	МЭО-1600/25-0,25У-92К	0,30	25	250	385	94
12c-8-12Э	1100	0,1	400	09Г2С	Air, gases	81500	1600	0,25	9160	240	1932	22	50	1110	1200	1250	24	МЭОФ-1600/25-0,25У-96К	0,30	25	390	514	95
12c-8-13	1200	0,1	400	09Г2С	Air, gases	100000	1600	0,25	10940	260	1483	22	50	1210	1300	1350	26	МЭО-1600/25-0,25У-92К	0,30	25	270	405	94
12c-8-13Э	1200	0,1	400	09Г2С	Air, gases	100000	1600	0,25	10940	260	2032	22	50	1210	1300	1350	26	МЭОФ-1600/25-0,25У-96К	0,30	25	410	534	95
12c-8-14	1300	0,1	400	09Г2С	Air, gases	112500	1600	0,25	12870	280	1583	22	50	1310	1400	1450	28	МЭО-1600/25-0,25У-92К	0,30	25	300	435	94
12c-8-14Э	1300	0,1	400	09Г2С	Air, gases	112500	1600	0,25	12870	280	2132	22	50	1310	1400	1450	28	МЭОФ-1600/25-0,25У-96К	0,30	25	440	564	95
12c-8-15	1400	0,1	400	09Г2С	Air, gases	125000	1600	0,25	14960	300	1683	22	50	1410	1500	1550	30	МЭО-1600/25-0,25У-92К	0,30	25	365	500	94
12c-8-15Э	1400	0,1	400	09Г2С	Air, gases	125000	1600	0,25	14960	300	2232	22	50	1410	1500	1550	30	МЭОФ-1600/25-0,25У-96К	0,30	25	505	629	95

* - Pressure, P

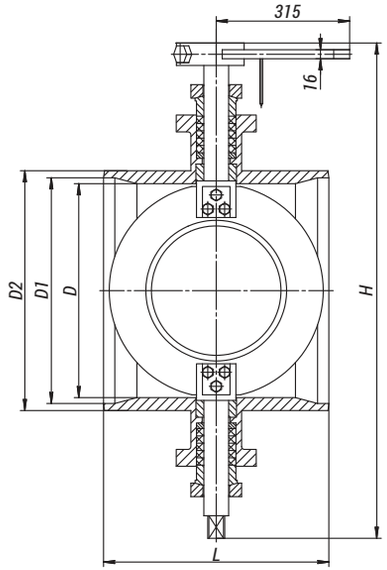

Figure 90
Control Valve with a Butterfly Damper

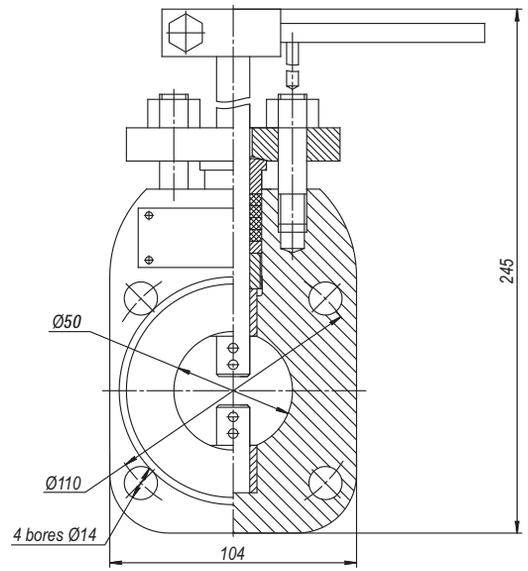

Figure 91
Control Valve with a Butterfly Damper

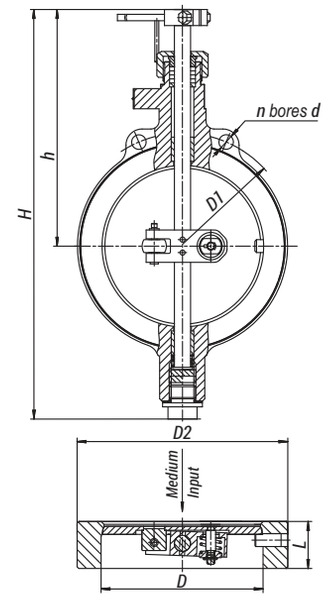

Figure 92
Control Valve with a Butterfly Damper

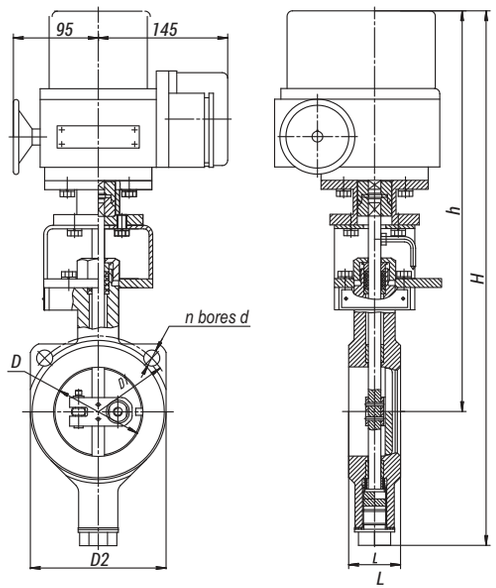

Figure 93
Control Valve with a Butterfly Damper
with a Built-In Electric Actuator

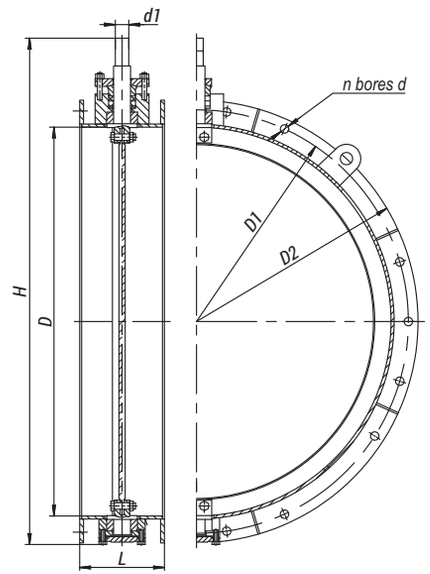

Figure 94
Disc Gate Valve

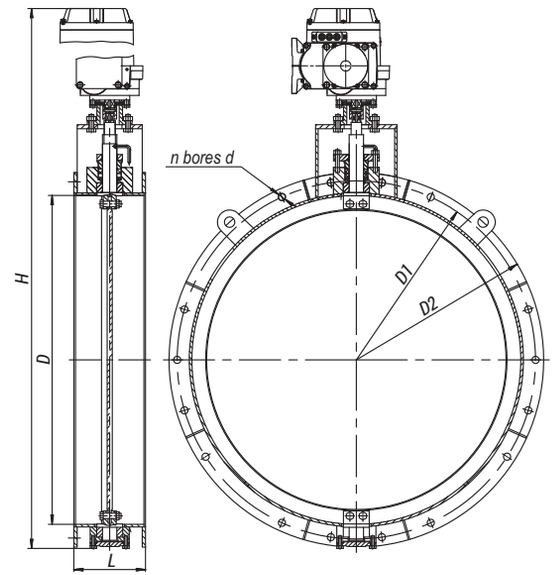

Figure 95
Disc Gate Valve with
a Built-in Electric Actuator

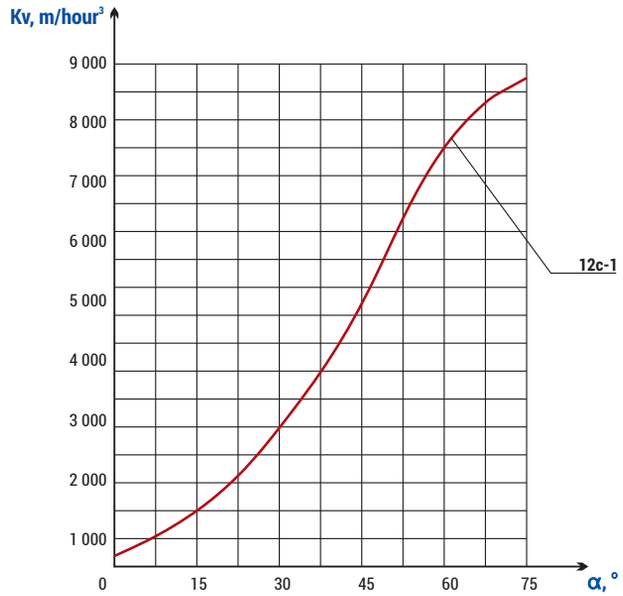

Diagram 47

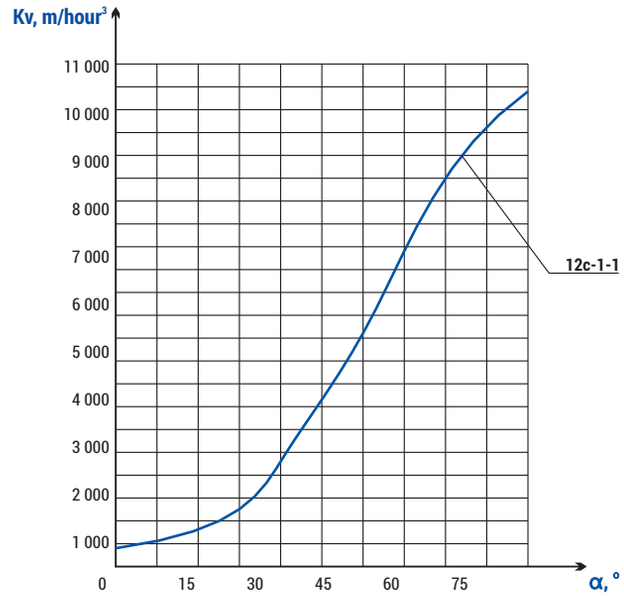

Diagram 48

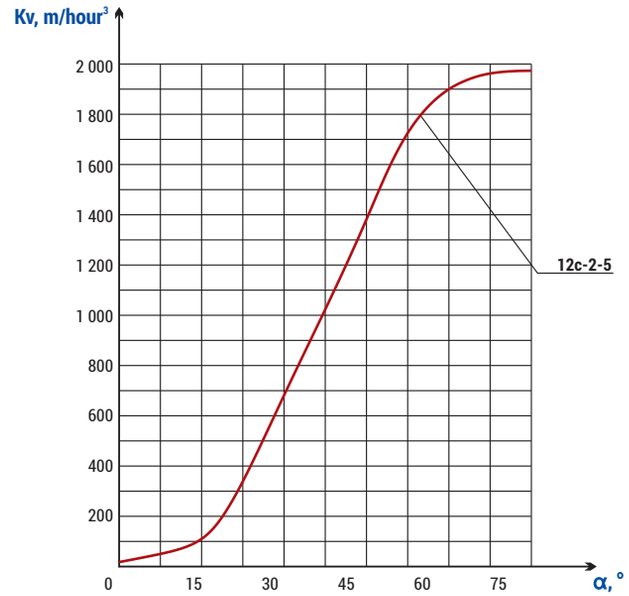

Diagram 49

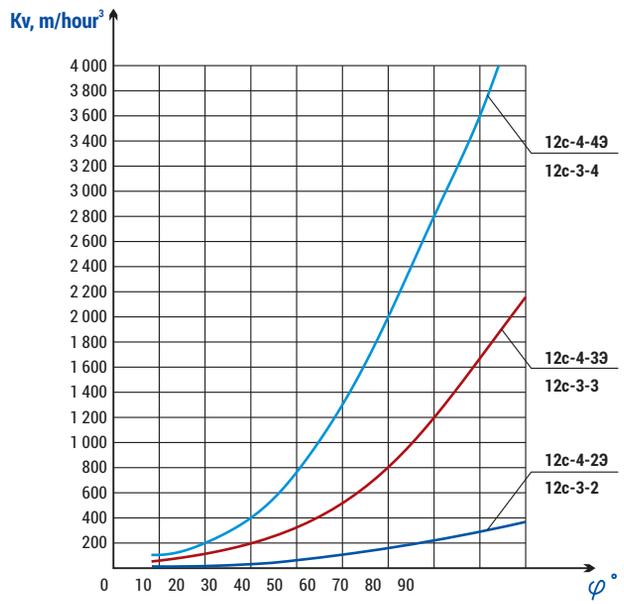

Diagram 50

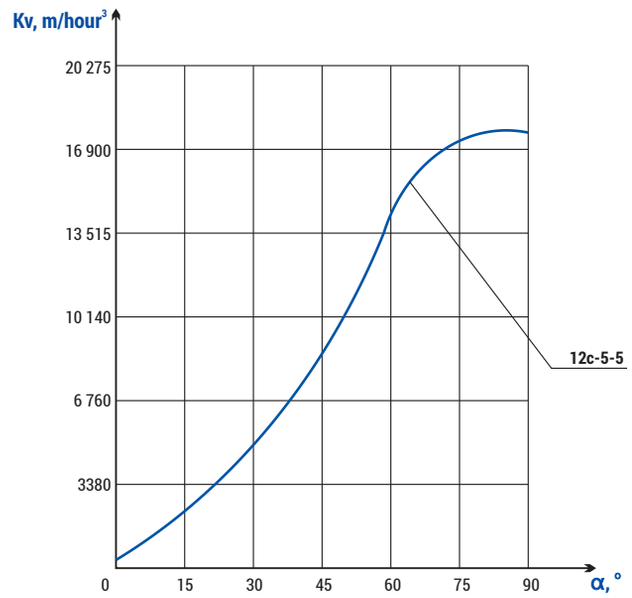

Diagram 51

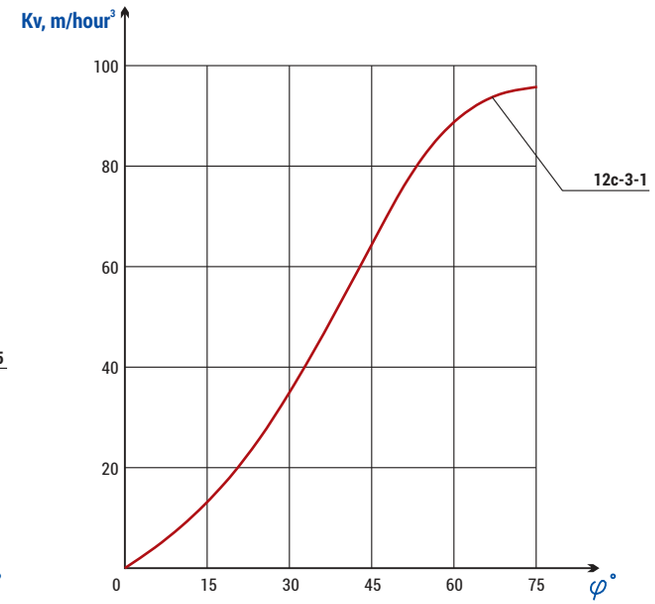

Diagram 52

Production according to TR 28.14.20-006-15365247-2016

Built-in and Core Type Electric Actuators manufactured by BKZ, LLC

Purpose

- The built-in electric actuators of series: 825, 876, 854, 792, 793, 794, 795, 797, 768, 798 are intended for the control of isolation and control fittings of TPS.
- The core type electric actuators of series: 821, 822, 824, 825, 876, 1280 are intended for the remote control of isolation and control valves under operational conditions not allowing application of built-in electric actuators.

The electric actuators enable the following actions:

- Closing, opening and stopping in any intermediate position of a locking device of fittings from the control board and in manual mode.
- Automatic switching-off of the electric motor:
  - when the locking or control device achieves the established boundary positions;
  - in extreme positions and in the intermediate position at the moment of stroke
    of the gate element when achieving the rotational torque on the driving shaft higher than the set one.
- Local and remote indication of the locking device position.
- Electric blocking of the electric motor in case of manual control of the fittings.
- Remote signaling.

Control

- **The electric actuators are controlled** according to the electric circuits.
- **In case of manual control**, the valves are closed through turning the handwheel to the right and opened through turning the handwheel to the left. The translation of motion happens through the worm gear using a roller.

Installation position

- A built-in electric actuator shall be directly installed on the trolley of valves. It consists of a single throated worm gear, an electric motor, a hand control blocking unit and a box of limit and position switches.
- A core type electric actuator shall be installed on the mounting pole (column).
  It consists of a single throated worm gear, an electric motor, a hand control blocking unit, a box of limit and position switches and a joint coupling shaft.

Built-in Electric Actuators manufactured by BKZ, LLC

Technical specifications

Climatic version:

- The electric actuators for the Russian domestic supplies are intended for operation in the macroclimatic areas with a moderate (У) climate, atmosphere type П and placement category 3 according to GOST 15150-69.
- The electric actuators for the export supplies are intended for operation in the macroclimatic areas with a moderate (У) or tropic (Т) climate, atmosphere type П and placement category 3 according to GOST 15150-69.

In order to obtain information on the working device position:

- Gate valves are completed with limit switches ВКО-31, ВКО-32 and ВКО-35.
- Control valves are completed with position signaling mechanisms МСП-1-1, МСП-1-2 and МСП-1-3.

The operation conditions in the closed premises are as follows:

- Ambient temperature: to 40 °C.
- Aerial environment: non-explosive.
- Elevation above sea level: to 1000 m.
- Relative humidity:
  - not more than 80% at 20 °C;
  - not more than 50% at 40 °C.

The choice of the device is carried out depending on the number of rotations of the spindle bushing, necessary for displacement of the shutoff or control body from one extreme position to another one.

The choice of limit switches ВКО and position signaling mechanisms МСП versions shall be done pursuant to the below table:

Position Signaling Device	Number of Spindle Rotations	
	Min	Max
МСП-1-1	0	35
МСП-1-2	0	18,8
МСП-1-3	0	7,5
ВКО-31П	0	8
ВКО-32П	8	36
ВКО-35П	36	240

Identification	Applicability valves	Maximum Torque on the Output Shaft of the Electric Actuator at ПВ=15%, N·m	Nominal Torque on the Output Shaft of the Electric Actuator at ПВ=25%, N·m	Rotational Speed, rpm	Motor Model	Power, kW	H, mm	H1, mm	L, mm	L1, mm	L2, mm	d, mm	D, mm	l, mm	l1, mm	b, mm	d+t, mm	Weight, kg	Diagram	Figure
821-Э-0a	Shut-off	80	-	18	АИР63В4У3	0,37	332	-	491	273	-	15	60	-	-	5	17,3	17,6	2	96
792-Э-0a	Shut-off	500	-	20,3	АИРС80А4У2	1,32	312	-	864	386	-	55	115	25	67	14	58,8	70,8	2	96
792-Э-0a-01	Shut-off	320	-	20,3	АИРС80А4У2	1,32	312	-	864	386	-	28	115	25	67	8	31,3	72,3	2	96
822-Э-0a	Shut-off	500	-	20,3	АИРС80А4У2	1,32	312	-	864	386	-	55	115	25	67	14	58,8	70,8	2	96
822-Э-0a-01	Shut-off	320	-	20,3	АИРС80А4У2	1,32	312	-	864	386	-	28	115	25	67	8	31,3	72,3	2	96
793-Э-0	Shut-off	1300	-	22,1	АИРС100S4У2	3,2	358	355	955	405	-	75	145	20	87	18	80,6	108	2	96
794-Э-0a	Shut-off	1300	-	21,6	АИРС100S4У3	3,2	430	355	955	550	-	85	185	25	87	18	89,4	102	2	96
823-Э-0	Shut-off	1300	-	22,1	АИРС100S4У2	3,2	358	355	955	405	-	75	145	20	87	18	80,6	108	2	96
824-Э-0a	Shut-off	1300	-	21,6	АИРС100S4У3	3,2	430	355	955	550	-	85	185	25	87	18	89,4	102	2	96
793-Э-0-II	Shut-off	430	-	21,9	АИРС80А4У2	1,32	358	434	955	405	-	75	145	20	87	18	80,6	98	2	96
795-Э-0	Shut-off	1800	-	21,3	АИРС100L4У3	4,25	-	460	1162	474	-	105	220	50	127	18	113,8	183	2	96
795-Э-0-V	Shut-off	1300	-	21,3	АИРС100S4У3	3,2	-	460	1070	474	-	105	220	50	127	18	113,8	177	2	96
795-Э-0-II	Shut-off	1500	-	42	АИРСМ112М4У3	6	-	460	1202	474	-	105	220	50	127	18	113,8	210	2	96
795-Э-0-II-01	Shut-off	1500	-	42	АИРСМ112М4У3	6	-	680	1202	474	-	105	220	50	127	18	113,8	212	2	96
795-Э-0-I	Shut-off	900	-	42,5	АИРС100L4У3	4,25	-	588	1162	474	-	105	220	50	127	18	113,8	184	2	96
795-Э-0-IV	Shut-off	630	-	20,9	АИРС80В4У3	1,7	-	460	1070	474	-	105	220	50	127	18	113,8	168	2	96
795-Э-0-V-01	Shut-off	1300	-	21,3	АИРС100S4У3	3,2	-	680	1070	474	-	105	220	50	127	18	113,8	179	2	96
825-Э-0	Shut-off	1800	-	21,3	АИРС100L4У3	4,25	-	460	1162	474	-	105	220	50	127	18	113,8	183	2	96
825-Э-0-I	Shut-off	1300	-	21,3	АИРС100S4У3	3,2	-	460	1070	474	-	105	220	50	127	18	113,8	177	2	96
825-Э-0-01	Shut-off	1800	-	21,3	АИРС100L4У3	4,25	-	588	1162	474	-	105	220	50	127	18	113,8	170	2	96
797-Э-0	Shut-off	4000	-	39,9	АИРСМ132М4У3	11,8	524	692	1345	542	-	140	280	40	150	18	144,4	417	2	96
854-Э-0	Shut-off	8800	-	20,4	АИРС160М4У3	20	430	930	1640	580	1130	-	390	-	-	-	-	736	1	96
821-ЭР-06	Control	-	75	18	АИР63В4У3	0,37	293	-	491	364	273	15	60	-	-	5	17,3	19,2	1	96
792-ЭР-0a-01	Control	-	300	20,3	АИРС80А4У2	1,32	403	-	864	386	435	28	115	25	67	8	31,3	73,9	1	96
792-ЭР-0a	Control	-	300	20,3	АИРС80А4У2	1,32	403	-	864	386	435	55	115	25	67	14	58,8	72,2	1	96
792-ЭР-0al	Control	-	300	40,6	АИРС80В4У2	1,7	403	-	884	386	435	55	115	25	67	14	58,8	74,1	1	96
822-ЭР-0a	Control	-	300	20,3	АИРС80А4У2	1,32	403	-	864	386	-	55	115	25	67	14	58,8	66,4	1	96
822-ЭР-0a-01	Control	-	300	20,3	АИРС80А4У2	1,32	403	-	864	386	-	28	115	25	67	8	31,3	68	1	96

Built-in Electric Actuators manufactured by BKZ, LLC

Identification	Applicability valves	Maximum Torque on the Output Shaft of the Electric Actuator at ПВ=15%, N•m	Nominal Torque on the Output Shaft of the Electric Actuator at ПВ=25%, N•m	Rotational Speed, rpm	Motor Model	Power, kW	H, mm	H1, mm	L, mm	L1, mm	L2, mm	d, mm	D, mm	l, mm	l1, mm	b, mm	d+t, mm	Weight, kg	Diagram	Figure
793-ЭР-0	Control	-	950	22,1	АИРС100S4У2	3,2	430	234	955	405	-	75	145	20	87	18	80,6	108	1	96
793-ЭР-0I	Control	-	530	44,3	АИРС100S4У2	3,2	430	355	955	405	-	75	145	20	87	18	80,6	109	1	96
793-ЭР-0I-01	Control	-	530	44,3	АИРС100S4У2	3,2	430	234	955	405	-	60	145	20	87	18	64,4	109	1	96
794-ЭР-0a	Control	-	970	21,6	АИРС100S4У3	3,2	430	355	955	550	-	85	185	25	87	18	89,4	110,8	1	96
794-ЭР-0aI	Control	-	560	41,2	АИРС100S4У3	3,2	430	355	955	550	-	85	185	25	87	18	89,4	110,8	1	96
824-ЭР-0a	Control	-	970	21,6	АИРС100S4У3	3,2	430	355	955	550	-	85	185	25	87	18	89,4	110,8	1	96
824-ЭР-0aI	Control	-	495	20,6	АИРС80В4У3	1,7	430	355	915	510	-	85	185	25	87	18	89,4	98	1	96
793-ЭР-0II	Control	-	320	21,9	АИРС80А4У2	1,32	430	234	895	405	-	64	145	20	87	18	69,6	99	1	96
793-ЭР-0-02	Control	-	320	21,9	АИРС80А4У2	1,32	430	234	895	405	-	75	145	20	87	18	80,6	98	1	96
793-ЭР-0-04	Control	-	480	21,9	АИРС80В4У2	1,7	430	234	915	405	-	64	145	20	87	18	69,6	101	1	96
823-ЭР-0-IIa	Control	-	280	43,8	АИРС80В4У2	1,7	430	234	915	405	-	75	145	20	87	18	80,6	108	1	96
823-ЭР-0III	Control	-	320	21,9	АИРС80А4У2	1,32	430	234	895	405	-	64	145	20	87	18	69,6	99	1	96
823-ЭР-0-IV	Control	-	480	21,9	АИРС80В4У2	1,7	430	234	915	405	-	75	145	20	87	18	69,6	101	1	96
823-ЭР-0-03	Control	-	320	21,9	АИРС80А4У2	1,32	430	234	895	405	-	75	145	20	87	18	80,6	90	1	96
795-ЭР-0-V	Control	-	1000	21,3	АИРС100S4У3	3,2	-	454	1070	474	-	105	220	50	127	18	113,8	178	1	96
795-ЭР-0	Control	-	1320	21,3	АИРСМ100L4У3	4,25	-	454	1162	474	-	105	220	50	127	18	113,8	183	1	96
795-ЭР-0-I	Control	-	750	42,5	АИРС100L4У3	4,25	-	588	1162	474	-	105	220	50	127	18	113,8	185	1	96
797-ЭР-0	Control	-	2300	39,9	АИРСМ132М4У3	11,8	545	-	1363	542	-	140	280	40	150	18	144,8	449	1	96
876-Э-0-02	Control	-	1800	21,1	АИРСМ112М4У3	6	572	-	1162	455	635	95	220	50	127	18	99,4	285	1	96
876-Э-0	Control	-	2000	42,3	АИРСМ132М4У3	11,8	572	-	1208	455	660	95	220	50	127	18	99,4	333	1	96
876-Э-0-04	Control	-	2000	42,3	АИРСМ132М4У3	11,8	572	-	1028	455	660	95	220	50	127	18	99,4	333	1	96
876-Э-0-07	Control	-	1500	42,3	4АМС132S4У3	8,5	572	-	1190	455	660	95	220	50	127	18	99,4	315	1	96
876-Э-0-08	Control	-	1800	21,1	АИРСМ112М4У3	6	572	-	1162	455	635	95	220	50	127	18	99,4	285	1	96
825-ЭР-0-I	Control	-	1000	21,3	АИРСМ100S4У3	3,2	-	454	1070	474	-	105	220	50	127	18	113,8	178	1	96
825-ЭР-0	Control	-	1320	21,3	АИРСМ100L4У3	4,25	-	460	1162	474	-	105	220	50	127	18	113,8	170	1	96

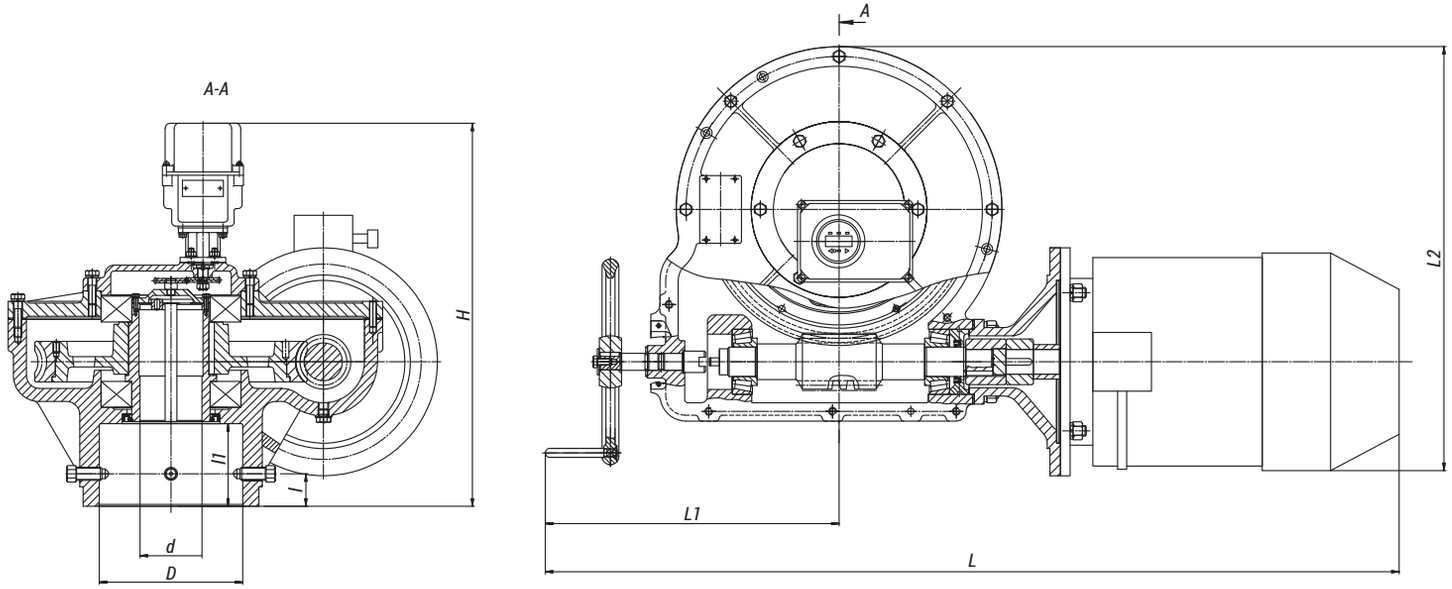

Figure 96
Built-in Electric Actuator
for Isolation and Control valves

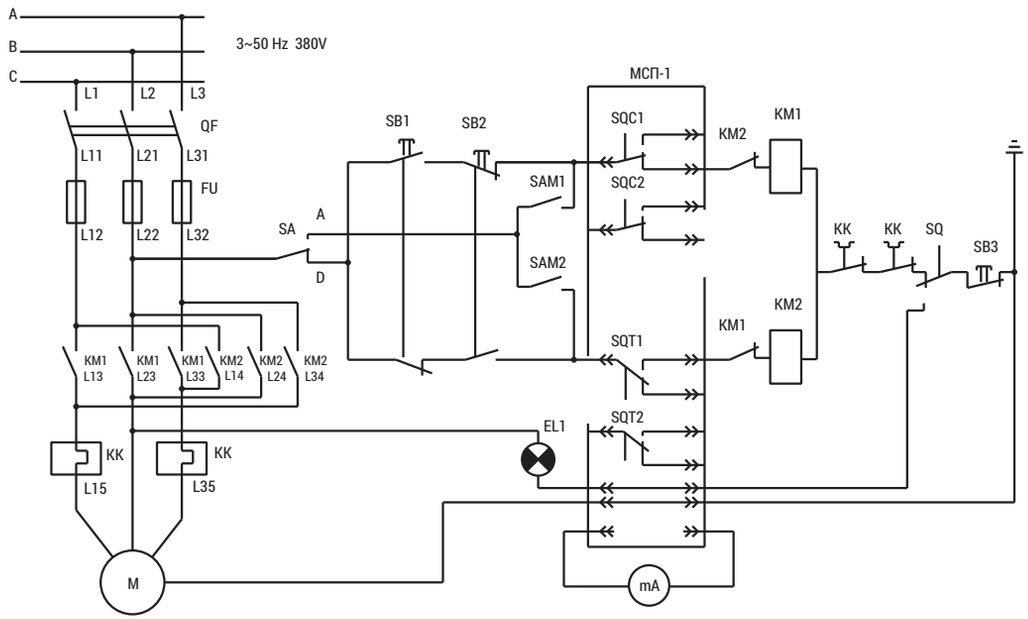

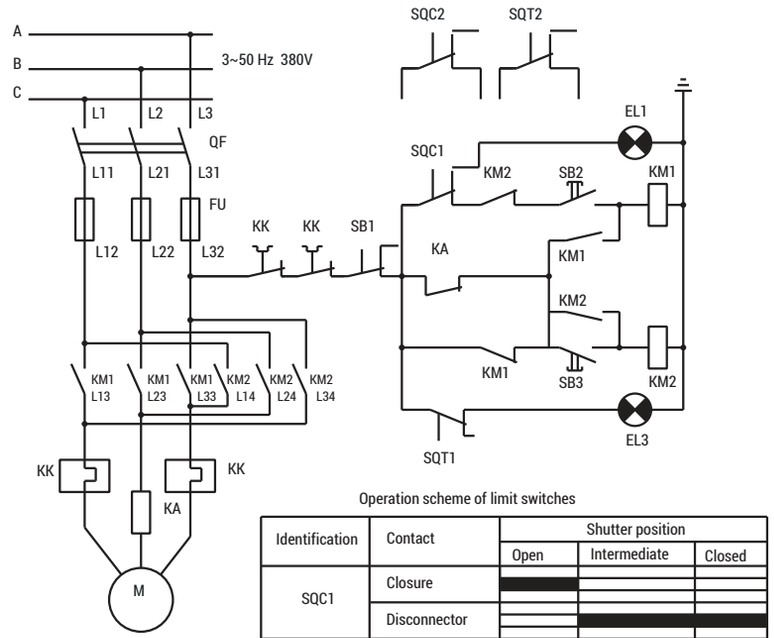

Operation scheme of limit switches

Identification	Contact	Shutter position		
		Open	Intermediate	Closed
SQC1	Closure	■		
	Disconnector		■	■
SQT1	Closure			■
	Disconnector	■		

Identification	Name
FU	Fuse
QF	Quick-break switch
SB1	Start button “more”
SB2	Start button “less”
KM1, KM2	Magnetic starters
SAM1, SAM2	Automatic control contacts
SA	Operation mode switching key
KK	Thermal relays
SQ	MC Blocking contact
SB3	Button “stop”
SQC1, SQT1	Start button “less”
SQC2, SQT2	Limit microswitches
M	Motor
EL1	Signaling lamp of manual control blocking
mA	Milliamperemeter

The electric actuators for gate valves are designed for operation in a short-time mode, the frequency of starting per an hour is not more than 6 times with the cyclic duration factor (CDF) of not more than 15%. The turning-off of the electric actuators happens in case of complete closing/opening of gate valves, i.e. when the overcurrent relay is activated.

The electric actuators for the control valves are designed for operation in an intermittent revertive operation mode with the number of switchings up to 320 per hour and the cyclic duration factor (CDF) up to 25% in case when the load on the output shaft is equal to the nominal one. At the same time, the electric actuators shall enable operation within 1 hour in an intermittent revertive operation mode with the number of switchings up to 630 per hour and CDF up to 25% with subsequent repetition not more than in 3 hours.

Identification	Name
FU	Fuse
QF	Switch
SB1	Manual control blocking button
SB2	Control button “open”
SB3	Control button “closed”
SQC1	Opening limit switch
SQT1	Closing limit switch
SQC2	Opening position switch
SQT2	Closing position switch
KM1	Opening magnetic starter
KM2	Closing magnetic starter
KK	Thermal relays
KA	Overcurrent relay
M	Motor
EL1	Signaling lamp “open”
EL2	Signaling lamp “closed”

Diagram 1
Of the electric actuator control for the control valves

Diagram 2
Of the electric actuator control for the control valves

Core Type Electric Actuators manufactured by BKZ, LLC

Identifications	Applicability to Fittings	Torque, N•m	Rotation Rate, rpm	Motor Model	Power, kW	H, мм	H1, мм	B, мм	L, мм	D, мм	D1, мм	Weight, kg	Figure
821-КЭ-0а	Shut-off	80	18	АИР63В4У3	0,37	-	-	-	-	-	-	21,6	98
824-КЭ-0-01	Shut-off	1300	22,1	АИРС100S4У2	3,2	969	967	500	965	425	360	165	97
822-КЭ-0	Shut-off	500	20,3	АИРС80А4У2	1,32	856	904	475	864	425	360	117	97
1280-КЭ-0	Shut-off	500	20,3	АИРС80А4У3	1,32	881	1043	498	945	425	360	174	97
825-КЭ-0	Shut-off	1800	21,3	АИРС100L4У3	4,25	921	1049	644	1162	500	400	270	97
822-КЭР-0	Control	300	20,3	АИРС80А4У2	1,32	947	904	475	864	425	360	118	97
824-КЭ-0-02	Control	950	21,6	АИРС100S4У2	3,2	969	967	500	955	425	360	166	97
824-КЭ-0-03	Control	400	21,9	АИРС80В4А3У3	1,7	969	967	500	915	425	360	156	97
824-КЭ-0-04	Control	530	44,3	АИРС100S4У2	3,2	969	967	500	955	425	360	163	97
825-КЭР-0	Control	1320	21,3	АИРС100L4У3	4,25	921	1049	644	1162	500	400	278	97
876-КЭР-0	Control	1500	42,3	4АМС132S4У3	8,5	1057	1203	660	1190	500	400	396	97

The electric actuator of series 821 is installed on the mounting pole and intended for the control of fittings with DN20. The remaining electric actuators are installed on columns and used for the control of valves with DN32 and more.
Depending on the place of valves location with regard to the electric actuator (up or down), a coupling joint is installed.

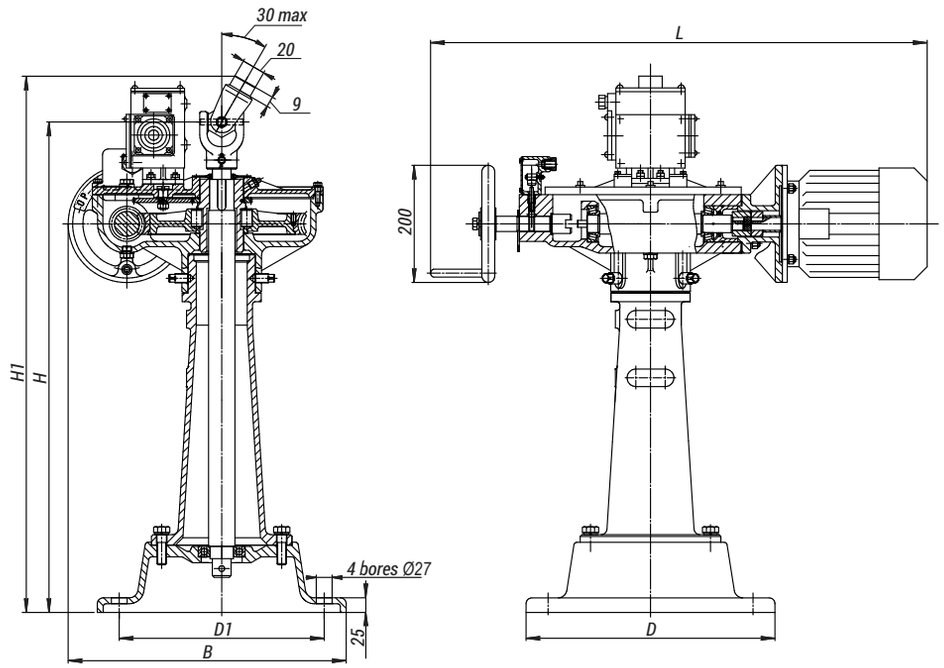

Figure 97
Core Type Electric Actuator
for gate and Control Valves

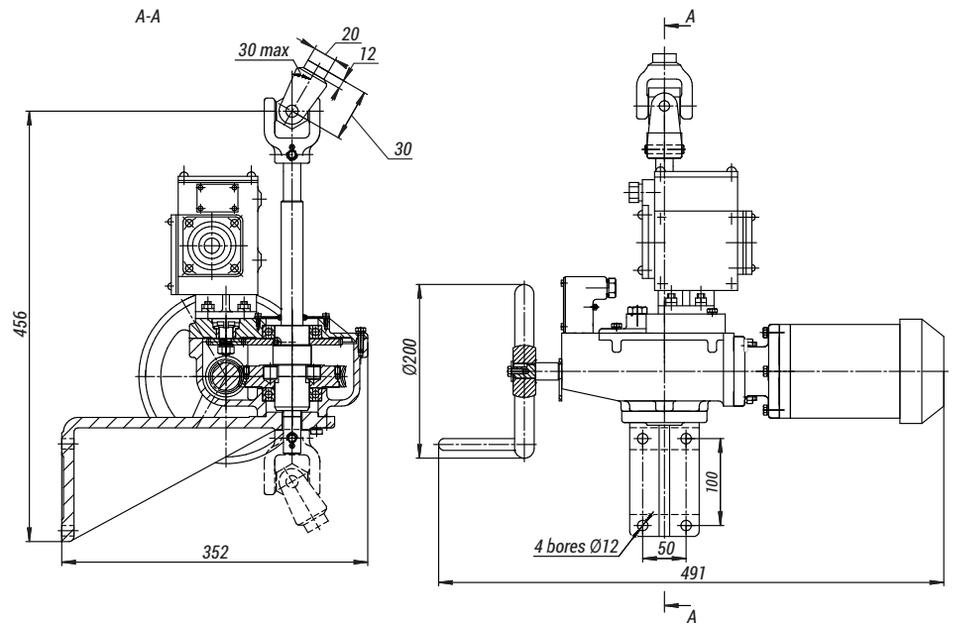

Figure 98
Core Type Electric Actuator
of Series 821

Pressure-Reducing and Desuperheating Stations and Desuperheating Stations

Purpose

The pressure-reducing and desuperheating stations (PRDS) and fast-response pressure-reducing and desuperheating stations (FRPRDS) are used in circuits of power generating units for reduction of pressure and steam temperature to the preset parameters.

- The desuperheating stations (DS) provide only the steam temperature reduction, while the pressure-reducing stations (PRS) ensure only steam pressure reduction.
- PRDSs are used for boiler lighting-up, reservation of production bleedings of turbines in the circuits of power generating units of medium and low pressure, steam discharge to the production bleedings, for own needs of power generation plants and in case of absence of other steam sources with the required parameters.
- FRPRDSs are designed for discharge of steam which is produced by a boiler or steam generator, but not consumed by the turbine on start-up and variable modes of the unit. The steam goes into the steam receivers of the condenser or in the auxiliary collector of the unit for power reservation of driving turbines of the feed pumps and blowers, as well as for the steam supply for heating-up of the intermediate superheating pipelines.

Possible completing units of the station

- A shutoff gate on the station inlet and outlet.
- A control valve on the live steam line or a control valve with combined reducing and cooling functions (on the live steam line).
- A steam desuperheater with nozzles.
- A throttling device.
- Isolation, control and check valves, filters installed on the injection line of cooling water.
- Valves on the drain lines.
- PC or POSV (on the reduced or cooled steam line).
- Pipeline elements for connection of all items to a complete whole.

Fig. 99 shows an exemplary diagram of PRDS.

1. Gate
2. Control valve (steam)
3. Steam desuperheater or noise damper unit with throttle-cooling grid
4. Pressure safety valve
5. Pulse valve
6. Control valve (water)
7. Gate valve
8. Needle valve
9. Filter
10. Check valve

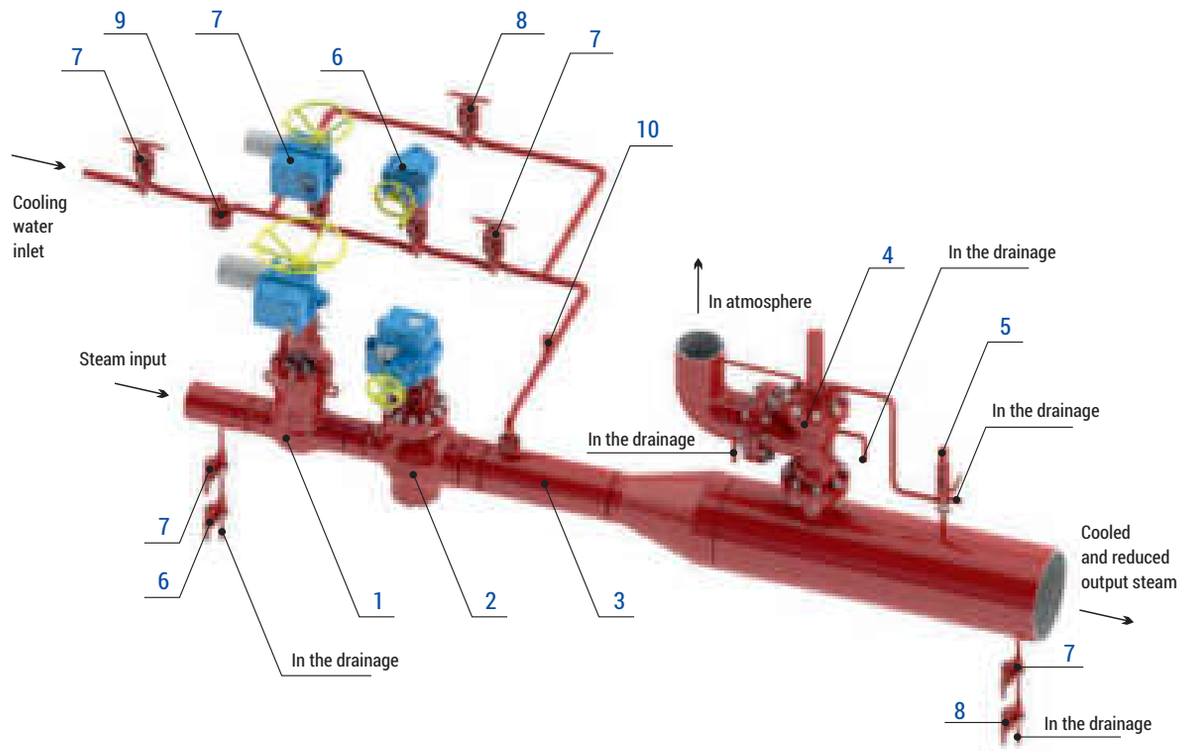

Рисунок 99
Exemplary Diagram of PRDS

Production according to TR 3113-003-15365247-2009

Desuperheaters for Steam High Conditions

Purpose

The steam desuperheaters are intended for steam cooling-down and form an integral part of DS, PRDS and FRPRDS.

Operating principle

The steam is cooled-down in the desuperheater thanks to injection of cooling water or steam-water mixture.
The cooling water is injected with the help of atomizing devices (nozzles of mechanical and steam atomization, atomizing inserts or spraying jets), the flow through which is regulated with an injection valve. A signal for the flow control of cooling water is given at the temperature of the cooled steam in the pipeline behind the steam desuperheater. The steam desuperheaters may be equipped with one or several throttle grids which perform final steam reducing after the pressure reducing valve (for PRDS, FRPRDS).
The grids also serve as noise dampers simultaneously, while reducing the noise level during steam expansion in the desuperheater.
Installation: on horizontal and vertical pipeline sections behind the steam reducing valve.

Technical specifications

Connection: welded connection.
Structural versions: various designs depending on operating parameters of live and reduced cooled steam. They differ from each other in dimensions, injection unit version and structure of atomizing devices, as well as in the number of throttle grids.
Material of desuperheater bodies: steel of type 12X1MΦ, 15X1M1Φ.

The table demonstrates typical steam desuperheaters. However, the majority of steam desuperheaters is individually designed for specific operation conditions.

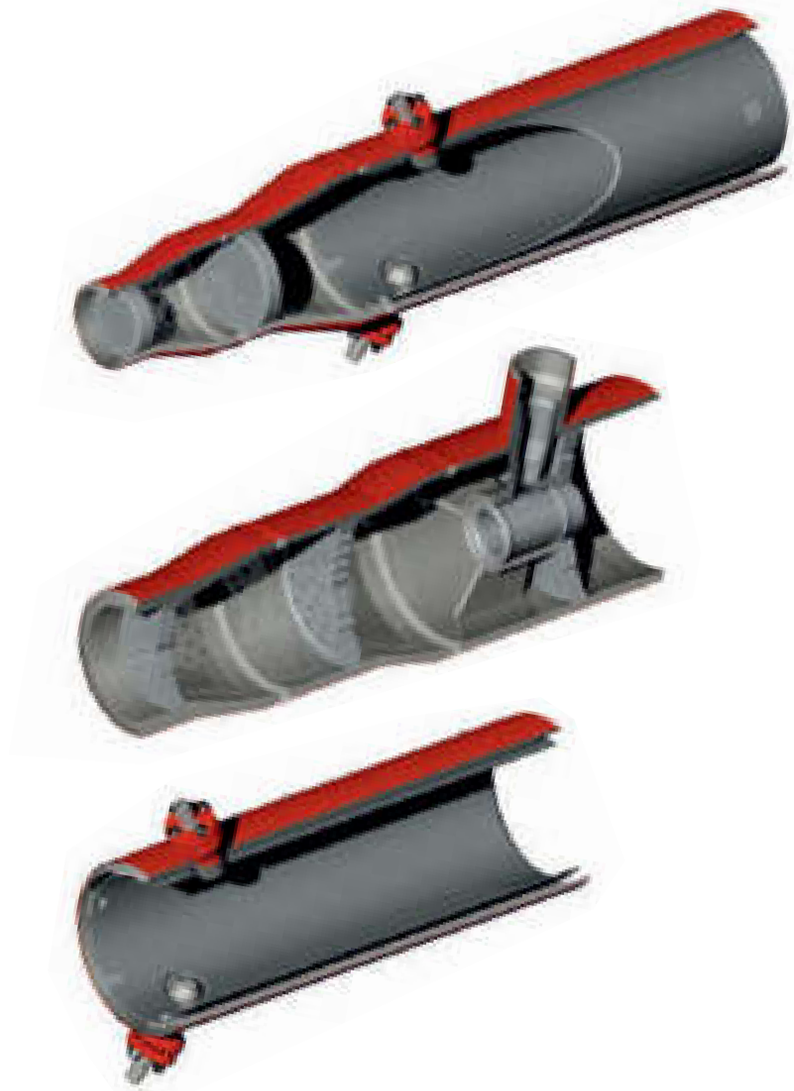

Desuperheaters for Steam High Conditions

Identification	DN, mm	Working Medium	P, MPa	T, °C	Grid Passage Area, cm²						L, mm	L1, mm	H, mm	D1, mm	D2, mm	D3, mm	D4, mm	D5, mm	D6, mm	Weight, kg	Figure
					S1	S2	S3	S4	S5	S6											
819-65/150-ОП	65/150	Steam	10,0	540	-	-	-	-	-	-	1150	320	365	62	76	112	133	20	32	76	100
819-100/250-ОП	100/250	Steam	10,0	540	-	-	-	-	-	-	1630	565	290	112	133	254	273	20	32	177	100
819-100/400-ОП	100/400	Steam	10,0	540	-	-	-	-	-	-	2352	1000	380	112	133	400	426	20	32	496	100
819-100/600-ОП	100/600	Steam	10,0	540	-	-	-	-	-	-	1640	1410	465	112	133	610	630	20	32	370	100
819-150/250-ОП	150/250	Steam	10,0	540	-	-	-	-	-	-	1420	345	290	163	194	254	273	20	32	158	100
819-150/350-ОП	150/350	Steam	10,0	540	-	-	-	-	-	-	1815	770	355	163	194	345	377	20	32	352	100
819-150/400-ОП	150/400	Steam	10,0	540	-	-	-	-	-	-	2120	755	380	163	194	400	426	20	32	484	100
819-150/600-ОП	150/600	Steam	10,0	540	-	-	-	-	-	-	1435	1205	465	163	194	610	630	20	32	354	100
819-150/800-ОП	150/800	Steam	10,0	540	-	-	-	-	-	-	1785	1400	500	163	194	800	820	20	32	454	100
819-225/225-ОП	225/225	Steam	10,0	540	-	-	-	-	-	-	1165	60	290	234	273	234	273	20	32	165	100
819-225/350-ОП	225/350	Steam	10,0	540	-	-	-	-	-	-	1520	435	335	234	273	345	377	20	32	317	100
819-225/400-ОП	225/400	Steam	10,0	540	-	-	-	-	-	-	1820	470	380	234	273	400	426	20	32	462	100
820-50/100-ОП	50/100	Steam	14,0	570	-	-	-	-	-	-	1435	270	225	50	76	112	133	20	32	63	100
820-100/250-ОП	100/250	Steam	14,0	570	-	-	-	-	-	-	1630	565	290	94	133	254	273	20	32	177	100
820-100/600-ОП	100/600	Steam	14,0	570	-	-	-	-	-	-	1640	1410	465	94	133	610	630	20	32	374	100
820-175/1000-ОП	175/1000	Steam	14,0	570	-	-	-	-	-	-	1915	1285	500	156	219	996	1020	20	32	580	100
820-175/225-ОП	175/225	Steam	14,0	570	-	-	-	-	-	-	1420	330	290	156	219	234	273	20	32	224	100
820-175/400-ОП	175/400	Steam	14,0	570	-	-	-	-	-	-	2105	780	380	156	219	400	426	20	32	520	100
820-175/450-ОП	175/450	Steam	14,0	570	-	-	-	-	-	-	2555	1245	390	156	219	424	465	20	32	672	100
820-175/600-ОП	175/600	Steam	14,0	570	-	-	-	-	-	-	1425	1195	465	170	219	610	630	20	32	380	100
820-250/250-ОП	250/250	Steam	14,0	570	-	-	-	-	-	-	1150	45	320	251	345	251	325	20	32	360	100
827-100/200-ОП	100/200	Steam	4,1	545	10,8	23,1	-	-	-	-	1100	350	550	95	133	184	219	20	32	140	100
827-150/250-ОП	150/250	Steam	4,1	545	75	-	-	-	-	-	1500	320	604	163	194	248	273	20	32	187	100
827-150/250-ОП-01	150/250	Steam	9,8	545	26	42	-	-	-	-	1500	320	604	94	133	248	273	20	32	230	100
827-150/250-ОП-02	150/250	Steam	9,8	545	-	-	-	-	-	-	1500	320	604	163	210	248	273	20	32	230	100
827-150/400-ОП	150/400	Steam	4,1	545	135	-	-	-	-	-	2340	925	379	163	194	390	426	20	32	594	100
827-150/400-ОП-01	150/400	Steam	4,1	545	15	27	50	94	175	-	2280	925	379	112	146	410	426	20	32	596	100
827-150/400-ОП-02	150/400	Steam	9,8	540	65	110	185	-	-	-	2280	925	379	156	219	410	426	20	32	596	100
827-175/175-ОП	175/175	Steam	9,8	540	-	-	-	-	-	-	1200	45	278	184	219	184	219	20	32	142	101
827-250/250-ОП	250/250	Steam	4,1	545	-	-	-	-	-	-	1200	45	608	248	273	248	273	20	32	157	101
827-250/350-ОП	250/350	Steam	4,1	545	-	-	-	-	-	-	1920	535	712	248	273	345	377	20	32	399	100
827-350/350-ОП	350/350	Steam	4,1	545	-	-	-	-	-	-	1220	45	712	345	377	345	377	20	32	260	101
827-400/400-ОП	400/400	Steam	4,1	545	-	-	-	-	-	-	1200	50	593,5	390	426	390	426	20	32	328	101
827-450/450-ОП	450/450	Steam	4,1	545	-	-	-	-	-	-	1500	45	800	424	465	424	465	20	32	469	101
863-350-ОП	350/350	Steam	4,1	545	179	-	-	-	-	-	430	230	510	345	377	345	377	112	133	122,4	103
863-350-ОП-01	350/350	Steam	4,1	545	179	-	-	-	-	-	430	230	510	345	377	345	377	112	133	122,4	103
863-350/450-ОП	350/450	Steam	4,1	545	280	-	-	-	-	-	880	220	510	345	377	424	465	112	133	220	104
863-450/700-ОП	450/700	Steam	2,2	460	693	-	-	-	-	-	1460	250	740	424	465	704	728	112	133	361	105
865-450-ОП	450/450	Steam	4,1	545	693	-	-	-	-	-	650	270	605	424	465	424	465	112	133	206	103
865-450-ОП-01	450/450	Steam	4,1	545	480	-	-	-	-	-	650	270	605	424	465	424	465	112	133	226	103
891-450/700-ОП	450/700	Steam	2,0	440	534	-	-	-	-	-	1410	675	830	424	465	702	724	112	133	362	105
891-450/700-ОП-01	450/700	Steam	2,0	440	1230	-	-	-	-	-	1410	675	830	424	465	702	724	112	133	400	105
950-600/900-ОП	600/900	Steam	2,2	440	1414	-	-	-	-	-	890	250	455	582	630	892	920	112	133	421	-
955-65/150-ОП	65/150	Steam	7,6	530	-	-	-	-	-	-	900	243	218	62	76	142	159	20	32	142	100
955-100/200-ОП	100/200	Steam	7,6	530	17,5	32	-	-	-	-	1300	360	337	112	133	195	219	20	32	180	100
955-100/200-ОП-01	100/200	Steam	7,6	530	36,7	-	-	-	-	-	1300	360	337	112	133	195	219	20	32	180	100
955-100/350-ОП	100/350	Steam	13,7	500	57	103	-	-	-	-	1920	800	710	97	159	345	377	20	32	368	100
955-150/350-ОП	150/350	Steam	7,6	530	67	122,5	-	-	-	-	1950	810	710	163	194	345	377	20	32	403,3	100

Desuperheaters for Steam High Conditions

Identification	DN, mm	Working Medium	P, MPa	T, °C	Grid Passage Area, cm²						L, mm	L1, mm	H, mm	D1, mm	D2, mm	D3, mm	D4, mm	D5, mm	D6, mm	Weight, kg	Figure
					S1	S2	S3	S4	S5	S6											
1100-65/100-ОП	65/100	Steam	9,0	540	5,5	9,4	-	-	-	-	505	350	205	62	76	112	133	22	29	21,5	102
1100-100/100-ОП	100/100	Steam	8,1	540	9,4	-	-	-	-	-	300	145	205	112	133	112	133	22	29	14,9	102
1100-100/100-ОП-01	100/100	Steam	8,1	540	17,8	-	-	-	-	-	300	145	205	112	133	112	133	22	29	14,9	102
1100-100/250-ОП	100/250	Steam	7,6	530	18,5	29,5	-	-	-	-	1110	820	360	112	133	248	273	112	133	152	102
1100-100/250-ОП-01	100/250	Steam	7,6	530	13,9	26,2	-	-	-	-	1110	820	360	112	133	248	273	112	133	155	102
1100-100/250-ОП-02	100/250	Steam	7,6	530	13,9	26,2	38,7	-	-	-	1110	820	360	112	133	248	273	112	133	155	102
1100-100/350-ОП	100/350	Steam	7,6	530	26,2	49,2	69,8	-	-	-	1500	1210	410	112	133	345	377	112	133	237	102
1100-100/350-ОП-02	100/350	Steam	7,6	530	26,2	49,2	69,8	115	-	-	1500	1210	410	112	133	345	377	112	133	256	102
1100-100/600-ОП	100/600	Steam	8,1	540	9,2	16,9	38	53,4	93	-	2175	1570	455	112	133	610	635	112	133	498	102
1100-100/600-ОП-01	100/600	Steam	8,1	540	40,0	70,8	123	226	387	-	2175	1570	455	112	133	610	635	112	133	527	102
1100-100/800-ОП	100/800	Steam	8,1	540	18,5	33,9	61,5	106,8	186,9	-	2530	1570	455	112	133	800	825	112	133	603	102
1100-150/250-ОП	150/250	Steam	6,4	540	44,9	-	-	-	-	-	840	550	360	163	194	248	273	112	133	134	102
1100-150/250-ОП-01	150/250	Steam	6,4	540	40,0	55,7	-	-	-	-	840	550	360	163	194	248	273	112	133	139	102
1100-150/250-ОП-02	150/250	Steam	6,4	540	74,1	-	-	-	-	-	840	550	360	163	194	248	273	112	133	135	102
1100-150/250-ОП-03	150/250	Steam	6,4	540	42,0	70	-	-	-	-	840	550	360	163	194	248	273	112	133	138	102
1100-150/350-ОП	150/350	Steam	6,8	530	119,5	-	-	-	-	-	1240	550	360	163	194	345	377	112	133	194	102
1100-150/350-ОП-01	150/350	Steam	6,8	530	55,4	86,8	-	-	-	-	1250	960	410	163	194	345	377	112	133	218	102
1100-150/350-ОП-02	150/350	Steam	6,8	530	46,2	-	-	-	-	-	1240	550	360	163	194	345	377	112	133	196	102
1100-150/350-ОП-03	150/350	Steam	6,8	530	56,1	86,7	-	-	-	-	1250	960	410	163	194	345	377	112	133	218	102
1100-150/450-ОП	150/450	Steam	7,1	525	95,4	149	-	-	-	-	1695	1405	455	163	194	424	465	112	133	473	102
1100-150/450-ОП-01	150/450	Steam	7,1	525	55,4	91,1	149	-	-	-	1695	1405	455	163	194	424	465	112	133	502	102
1100-150/450-ОП-02	150/450	Steam	7,1	525	40,0	70,8	109	-	-	-	1695	1405	455	163	194	424	465	112	133	473	102
1100-150/450-ОП-03	150/450	Steam	7,1	525	70,8	123	226	387	-	-	1695	1405	455	163	194	424	465	112	133	502	102
1100-150/450-ОП-04	150/450	Steam	7,1	525	86,2	154	339,8	-	-	-	1695	1405	455	163	194	424	465	112	133	473	102
1100-150/800-ОП	150/800	Steam	7,6	530	40,0	70,7	122,5	198	-	-	2365	1405	455	163	194	800	825	112	133	648	102
1100-150/800-ОП-01	150/800	Steam	7,6	530	49,2	87,6	138,2	223	-	-	2365	1405	455	163	194	800	825	112	133	648	102
1100-150/1000-ОП	150/1000	Steam	6,8	540	40,0	70,8	123	226	387	-	2585	1500	455	163	194	996	1020	112	133	679	102
1100-175/450-ОП	175/450	Steam	7,1	525	121,7	221,1	-	-	-	-	1738	1448	455	184	219	424	465	112	133	487	102
1101-50/100-ОП	50/100	Steam	9,4	540	5,5	9,4	-	-	-	-	510	360	205	50	76	112	133	22	29	23,9	102
1101-100/250-ОП	100/250	Steam	10,8	540	13,9	26,2	38,7	-	-	-	1210	920	360	94	133	248	273	112	133	195	102
1101-100/250-ОП-01	100/250	Steam	10,8	540	10,8	18,5	32,6	-	-	-	1210	920	360	94	133	248	273	112	133	196,2	102
1101-100/250-ОП-02	100/250	Steam	10,8	540	26,0	42	-	-	-	-	1210	920	360	94	133	248	273	112	133	191	102
1101-100/250-ОП-03	100/250	Steam	13,7	560	29,0	50	77	-	-	-	1210	920	360	94	133	248	273	112	133	193	102
1101-100/350-ОП	100/350	Steam	13,7	545	57,0	103	-	-	-	-	1500	1210	410	97	159	345	377	112	133	317	102
1101-100/800-ОП	100/800	Steam	10,8	540	13,9	26,2	41,5	72,2	125,6	-	2940	1985	455	94	133	800	825	112	133	826	102
1101-150/225-ОП	150/225	Steam	12,0	550	71,0	-	-	-	-	220,4	840	550	360	156	219	230	273	106	133	190	102
1101-150/225-ОП-01	150/225	Steam	12,0	550	49,0	71	-	-	-	-	840	550	360	156	219	230	273	106	133	220	102
1101-150/450-ОП	150/450	Steam	10,8	530	40,0	70,8	109	-	-	-	1695	1405	455	156	219	424	465	112	133	490	102
1101-150/450-ОП-01	150/450	Steam	10,8	530	59,7	107,7	149	-	-	-	1695	1405	455	156	219	424	465	112	133	488	102
1101-150/450-ОП-02	150/450	Steam	10,8	530	40,0	70,8	132	219	-	-	1695	1405	455	156	219	424	465	112	133	529	102
1101-150/450-ОП-03	150/450	Steam	10,8	530	47,7	87,7	159,8	-	-	-	1695	1405	455	156	219	424	465	112	133	485	102
1101-150/450-ОП-04	150/450	Steam	10,8	530	43,0	70,8	109	-	-	-	1695	1405	455	156	219	424	465	112	133	490	102
1101-150/450-ОП-05	150/450	Steam	10,8	530	43,0	70,8	130,5	-	-	-	1695	1405	455	156	219	424	465	112	133	489	102
1101-150/450-ОП-06	150/450	Steam	10,8	530	46,2	86,2	154	339,8	-	-	1695	1405	455	156	219	424	465	112	133	533,5	102
1101-150/600-ОП	150/600	Steam	8,5	535	80,0	138,2	228,4	-	-	-	2010	1400	455	156	219	610	635	112	133	597	102
1101-150/600-ОП-01	150/600	Steam	8,5	535	95,4	157	282,7	-	-	-	2010	1440	455	156	219	610	635	112	133	596	102
1101-150/600-ОП-02	150/600	Steam	8,5	535	80,0	136	250	-	-	-	2010	1440	455	156	219	610	635	112	133	596	102
1101-150/600-ОП-03	150/600	Steam	8,5	535	40,0	70,8	123	226	387	-	2010	1440	455	156	219	610	635	112	133	681	102

Desuperheaters for Steam High Conditions

Identification	DN, mm	Working Medium	P, MPa	T, °C	Grid Passage Area, cm²						L, mm	L1, mm	H, mm	D1, mm	D2, mm	D3, mm	D4, mm	D5, mm	D6, mm	Weight, kg	Figure
					S1	S2	S3	S4	S5	S6											
1101-150/600-ОП-04	150/600	пар	8,5	535	70,8	123	226	387	-	-	2010	1440	455	156	219	610	635	112	133	626	102
1101-150/600-ОП-05	150/600	пар	8,5	535	53,9	95,6	164,2	550	433,9	-	2010	1440	455	156	219	610	635	112	133	680	102
1101-150/600-ОП-06	150/600	пар	9,0	535	107	185	320	287,7	920	-	2010	1440	455	156	219	610	635	112	133	698	102
1101-150/800-ОП	150/800	пар	8,5	535	94,4	137	238	412	-	-	2365	1500	455	156	219	800	825	112	133	694	102

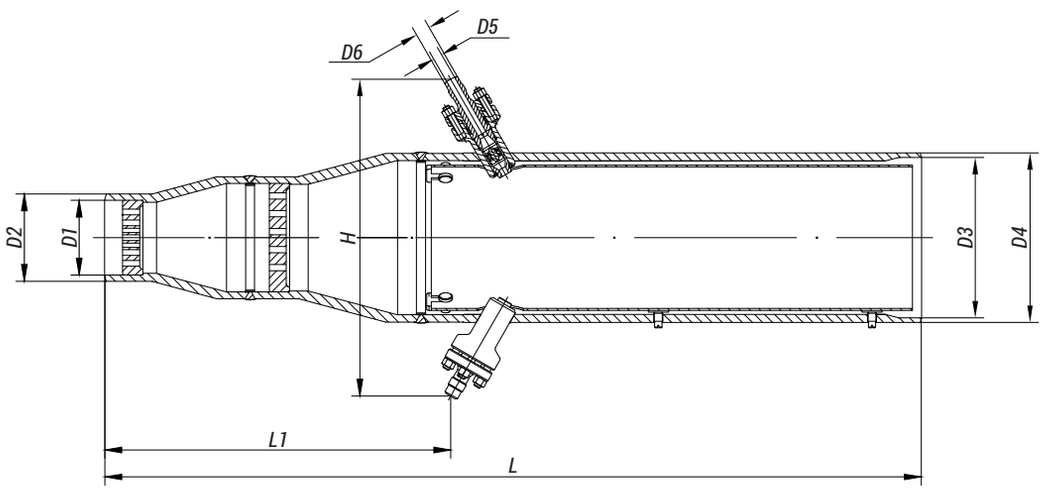

Figure 100
Steam Desuperheater of Series 819, 820, 955.

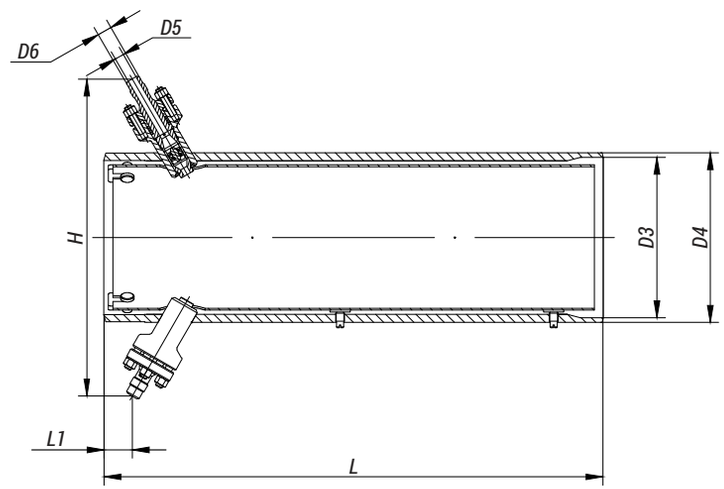

Figure 101
Steam Desuperheater of Series 827

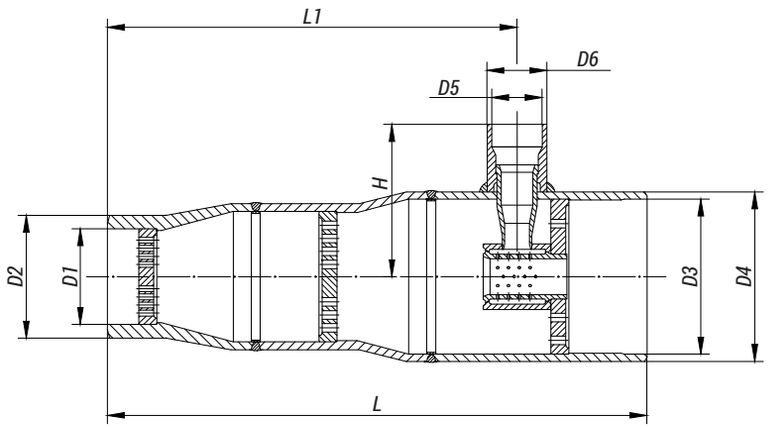

Figure 102
Steam Desuperheater of Series 1100, 1101

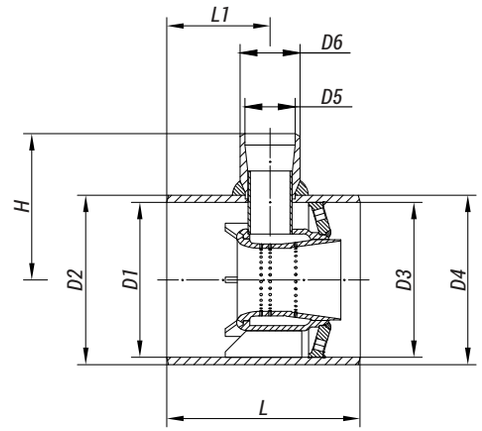

Figure 103
Steam Desuperheater of Series 863, 865

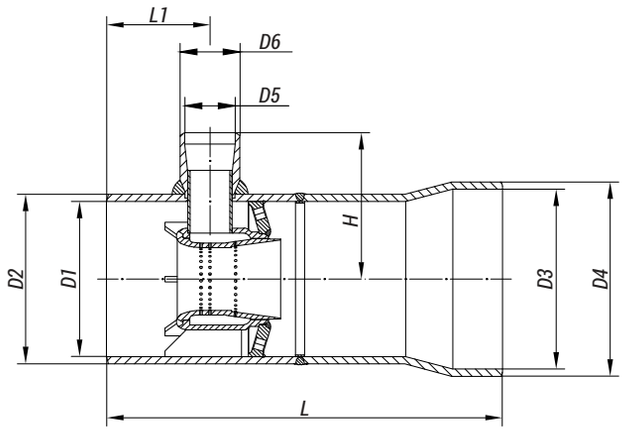

Figure 104
Steam Desuperheater of Series 863

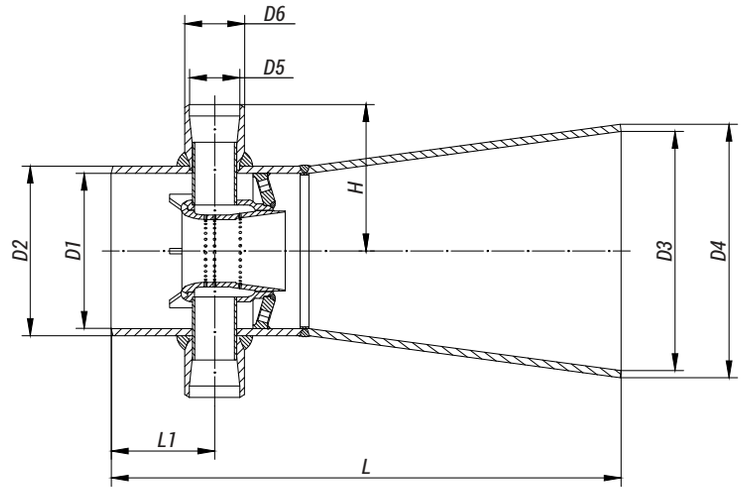

Figure 105
Steam Desuperheater of Series 863, 891

Throttle Devices

Purpose

- **The throttle devices of series 863, 865, 891, 950, 1040, 1041 are used as uncontrolled throttling elements of PRS, PRDS and FRPRDS.**
- **The throttle devices DN 100/200 of series 1040 and 1041 are respectively included into the composition of steam-generating plants УПГ 50/60 and УПГ 60/160.**

Technical specifications

They are directly installed behind the globe and throttle valves of PRS, PRDS and FRPRDS on vertical and horizontal pipeline sections.
Working medium flow direction: from a branch pipe of lesser diameter to a larger one.
Body material:

- steel 12Х1МФ or 15Х1М1Ф at the temperatures over 450 °C;
- steel 20, 09Г2С or 15ГС at the temperatures under 450 °C.

Pipeline connection: welded connection.

The table demonstrates typical throttle devices. However, the majority of throttle devices is individually designed for specific operation conditions.

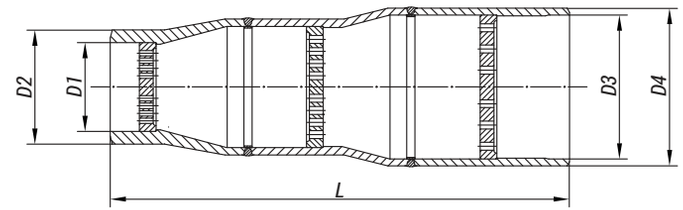

Figure 106
Throttle Device

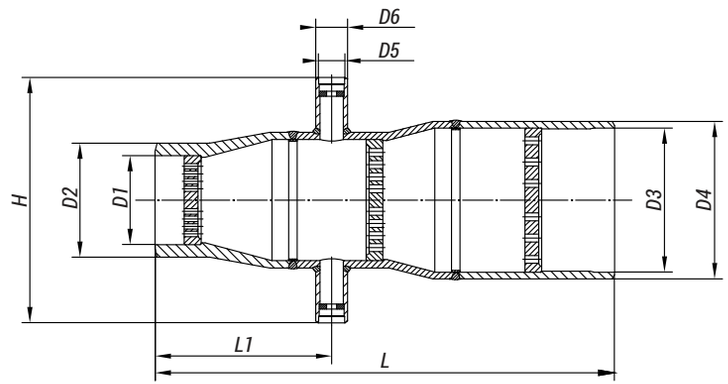

Figure 107
Throttle Device
with Steam Bleeding

Identification	DN, mm	Working Medium	Inlet/Outlet Pp (PN), MPa	Inlet/Outlet Tp (Tmax), °C	Grid Passage Area, cm²						L, mm	L1, mm	H, mm	D1, mm	D2, mm	D3, mm	D4, mm	D5, mm	D6, mm	d2, mm	Weight, kg	Figure
					S1	S2	S3	S4	S5	S6												
1041-100/200-Ш	100/200	Steam	11,0/0,7	320/165	6,15	10,8	18,5	32,3	50,2	-	840	-	-	114	140	195	219	-	-	-	88,5	106
1040-100/200-Ш	100/200	Steam	3,6/0,7	245/165	15,4	24,6	40,8	-	-	-	580	-	-	109	140	195	219	-	-	-	55,2	106
863-150/350-Ш	150/350	Steam	13,0/2,1	490/460	69	104,0	192,0	-	-	-	1075	575	550	170	245	345	377	62	76	62	215,0	107
863-150/350-Ш-01	150/350	Steam	13,0/2,1	490/460	32	44,0	78,5	-	-	-	1075	575	550	170	245	345	377	62	76	62	210,0	107
863-250/450-Ш	250/450	Steam	13,2/2,0	500/460	174	261,0	477,0	-	-	-	1125	605	650	263	325	424	465	62	76	62	321,5	107
865-250/450-Ш	250/450	Steam	12,3/2,0	490/470	174	260,0	-	-	-	-	1125	620	650	263	325	424	465	62	76	62	295,0	107
891-250/450-Ш	250/450	Steam	12,0/2,0	490/440	182	323,0	555,0	-	-	-	1125	605	650	263	325	424	465	62	76	62	320,0	107
950-150/450-Ш	150/450	Steam	7,1/2,1	525/510	86	213,0	-	-	-	-	1200	-	-	163	194	424	465	-	-	-	274,0	106
950-250/600-Ш	250/600	Steam	14,0/2,2	500/435	212	392,5	716,0	-	-	-	1800	-	-	251	325	582	630	-	-	-	716,0	106

Steam-Water Nozzles

Purpose

The nozzles are used as parts of steam desuperheaters of PRDS, FRPRDS and intended for atomizing of cooling water.
When all types of steam-water nozzles are operating, a steam-water mixture is produced at the outlet with the saturation temperature, which is further supplied to the injection unit of the steam desuperheater.

Technical specifications

The combined steam-water nozzle of type 1431-100/65-Ф (fig. 100) is intended for atomizing of cooling water with the help of the steam flow and for receipt of a steam-water mixture for injection to the steam desuperheater of FRPRDS. Two nozzle versions differ in throttling orifices at the inlet branches intended for the steam pressure reduction.
The steam-water nozzle with one-side steam supply 1415-100/50-Ф (fig. 101) is structurally similar to nozzle 1431-100/65-Ф.
The nozzle versions are chosen according to the results of thermohydraulic calculation.
Pipeline connection: welded connection.

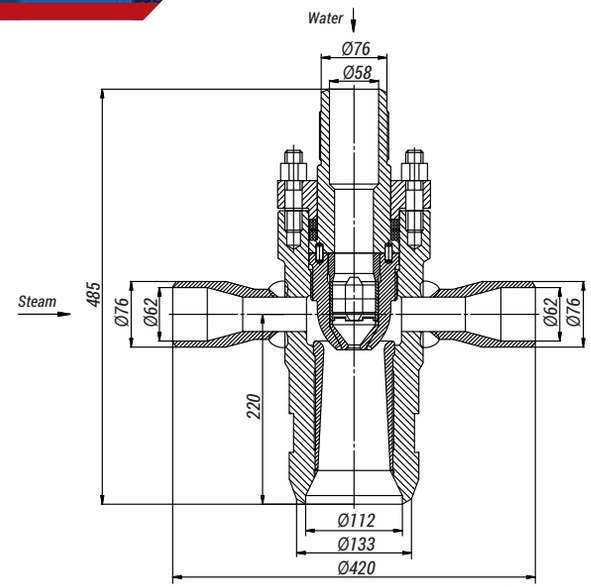

Figure 108
Steam-Water Nozzle 1431

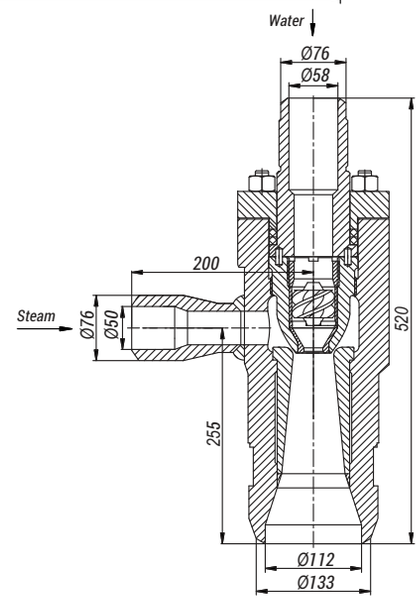

Figure 109
Steam-Water Nozzle 1415

Identification	DN,мм (Inlet/Outlet), mm	Working Medium	Medium Design Parameters				Body Material	Weight, kg	Figure
			Steam		Water				
			P, MPa, not more than	T,°C, not more than	P, MPa, not more than	T,°C, not more than			
1415-100/50-Ф...-24	50/100	Water-steam	13,7	560	23,5	250	12Х1МФ	57,2...59,1	109
1431-100/65-Ф...-02	65/100	Water-steam	9,8	540	23,5	250	12Х1МФ	63,7	108

Filters of Type 13c

Purpose

The main purpose is to prevent channel clogging of water and steam-water nozzles of steam desuperheaters on the pressure-reducing and desuperheating stations.

The filters of type 13c for steam and water refer to the elements of excess rpressure pipelines.

Technical specifications

Pipeline connection: welded connection.

Installation position: any position on the pipeline, in the lower semi-sphere with regard to the neck. The filters are intended for outdoor installation and installation in closed premises.

Working medium supply direction: under the filtering element.

Climatic version: У, УХЛ, Т according to GOST 15150-69.

Placement category: 1, 2, 3 according to GOST 15150-69.

Acceptable use

According to GOST 356-80, the **items designed for the ultimate** pressure allow their application on operating parameters within the following range:

- at PN 10 MPa – from 10 MPa, 200 °C to 3,6 MPa, 455 °C;
- at PN 25 MPa – from 25 MPa, 200 °C to 9 MPa, 455 °C;
- at PN 6,3 MPa – from 6,3 MPa, 200 °C to 2,3 MPa, 455 °C.

The permissible values of operating pressures and temperatures for the filters may differ from those ones indicated in the table with technical specifications and shall be chosen according to GOST 356-80.

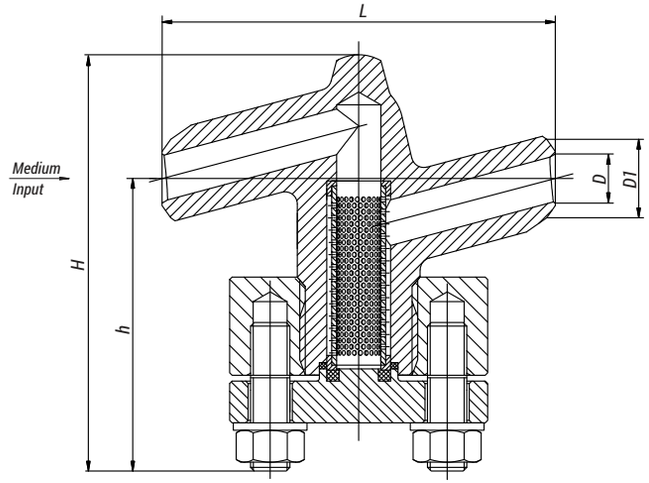

Figure 110
Filter of Type 13c

Identification	DN, mm	PN, MPa	Tmax of the Medium, °C	Body Material, Steel	Working Medium	L, mm	H, mm	D, mm	D1, mm	h, mm	Item Weight, kg	Figure
13c-1-1	10	10	450	20	Water-Steam	110	123	10	16	95	4,0	110
13c-2-1	10	37,3*	280	20	Water	110	123	10	16	95	4,0	110
13c-3-1	10	25*	545	12X1MΦ	Steam	110	123	10	16	95	4,0	110
13c-1-2	15	25	350	20	Water-Steam	160	165	16	25	119	5,7	110
13c-1-3	20	10	425	20	Water-Steam	160	165	22	32	119	5,6	110
13c-2-3	20	37,3*	280	20	Water	160	165	20	32	119	5,6	110
13c-3-3	20	25*	545	12X1MΦ	Steam	160	165	20	32	119	5,6	110
13c-1-4	25	10	450	20	Water-Steam	160	165	26	32	119	5,5	110
13c-1-5	32	10	450	20	Water-Steam	230	162	32	38	115	2,62	110
13c-3-5	32	25*	545	12X1MΦ	Steam	220	279	31	57	190	26,7	110
13c-2-6	40	37,3*	280	20	Water	220	279	39	57	190	26,2	110
13c-1-7	50	6,3	425	20	Water-Steam	240	162	50	57	115	4,69	110
13c-2-7	50	25	350	20	Water-Steam	220	279	49	60	190	25,7	110
13c-3-7	50	13,7*	560	12X1MΦ	Steam	250	295	50	76	200	28,7	110
13c-2-8	65	23,5*	250	20	Water	250	295	58	76	200	28,3	110
13c-3-8	65	9,8*	540	12X1MΦ	Steam	250	295	62	76	200	28,3	110

* - Pressure, P

Desuperheaters for Steam Average Conditions

Purpose

The steam desuperheaters are intended for steam cooling-down and form an integral part of DS and PRS.

Operating principle

The steam is cooled-down in the desuperheater thanks to evaporation of cooling water, injected with the help of atomizing jets, the flow through which is regulated with an injection valve.

Technical specifications

BBP, LLC produces desuperheaters in two modifications:
1) with water injection perpendicular to the steam flow (fig. 103);
2) with water injection along the axis of steam flow (fig. 104).

The typical steam desuperheaters have the following characteristics:
- DN 80, 100, 150, 200, 250, 300, 350, 400, 450, 500, 600;
- length from 600 to 2550 mm;
- number of injection nozzles: 1-4 (chosen according to the results of thermohydraulic calculation).

Material of desuperheater bodies: steel 20, 09Г2С, 15ГС.
Pipeline connection: welded connection, flanged connection.
Installation position: on horizontal and vertical pipeline sections.

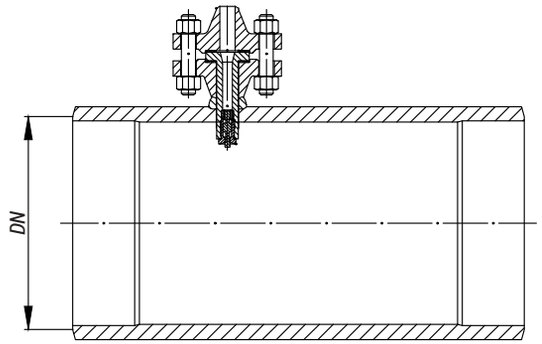

← **Figure 111**
Desuperheater with Water Injection perpendicular to Steam Flow

Silencer with Throttle Grids and Throttle-Cooling Grids for Steam Average Conditions

Purpose

The Silencer with throttle and throttle-cooling grids are used as uncontrolled throttling elements of PRS and PRDS.
- The Silencer with throttle grid (fig. 105) are intended for the noise level reduction when throttling and extending of steam in PRS and PRDS.
- The Silencer with throttle-cooling grid (fig. 106) are intended both for throttling and cooling-down of steam and form a part of PRDS.

Operating principle

When going through the throttle-cooling grid, the steam is cooled-down thanks to evaporation of cooling water, injected with the help of an atomizing insert, the flow through which is regulated with an injection valve.

Technical specifications

The typical Silencer possess the following characteristics:
- DN 80, 100, 150, 200, 250, 300, 350, 400, 450, 500, 600;
- length from 100 to 600 mm.

Material of desuperheater bodies: steel 20, 09Г2С, 15ГС.
Pipeline connection: welded connection, flanged connection.
The units are directly installed behind the throttle valves of PRS and PRDS.
Installation position: on horizontal and vertical pipeline sections.

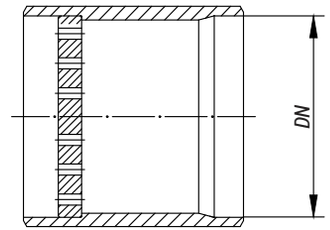

Figure 113
Silencer with Throttle Grid

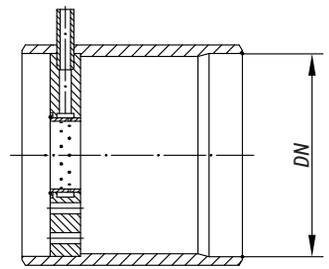

Figure 114
Silencer with Throttle-Cooling Grid

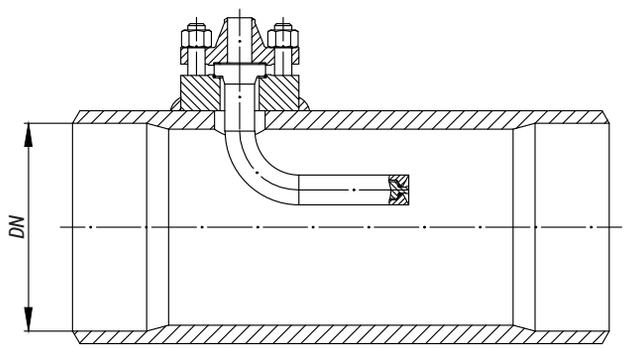

← **Figure 112**
Desuperheater with Water Injection along the Axis of Steam Flow

Production according to TR 27.12.31-007-15365247-2016

Integrated supply of power fittings and automation systems with a warranty from one manufacturer

Control Cabinets

BBP, LLC completes the below equipment with own-produced control cabinets:

- **PRDS (FRPRDS, DS, PRS), Fig. 115.**
- **Electric and pneumatic fittings, Fig. 116.**
- **POSV (pilot-operated safety valves), Fig. 117.**

The control cabinet provides remote automatic control and regulation of engineering processes of steam preparation to the specified accuracy.

The installation diagrams and operating principles of the control cabinets for PRDS, electric and pneumatic fittings, as well as POSV are shown on Fig. 115, 118, 119 respectively.

The measuring equipment and sensors are shown on Fig. 117.

All types of control cabinets provide:

- Simple control through the Menu of imaging screens, Fig. 116: mnemonic diagram, alarm signaling, adjustment of PID-regulator, electronic recorder, event archive.
- Control, registration and indication of the steam temperature and pressure at the station inlet and outlet.
- Control, registration and indication of the cooling water pressure and temperature.
- Remote and local management of electric actuators of globe and control valves.
- Control of heating-up of the PRDS.
- Control of incoming phases.
- Control of thermal relay and automatic devices position.
- Regulation of temperature and pressure in the automatic and manual mode.
- Parameter archiving at the computer and in the CCC (over 100 hours of continuous recording).
- Sound and light signaling.
- Sensor monitoring (breakage, short circuit)- Connection to the computer through RS-485 interface.

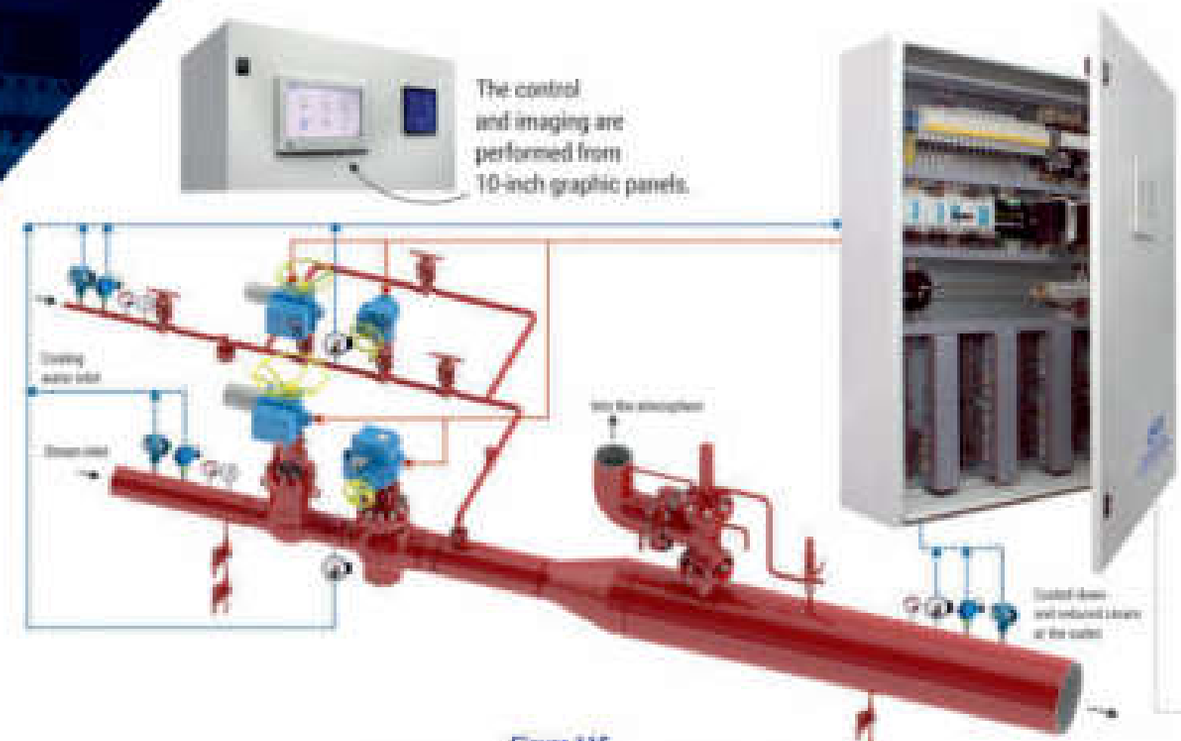

Figure 115
Installation diagram of control cabinets of PRDS

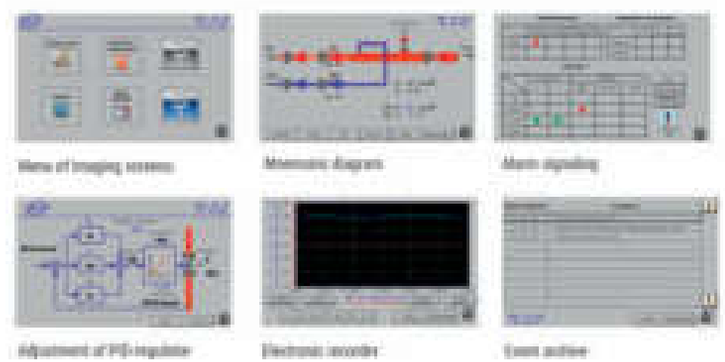

Figure 116
Imaging screens

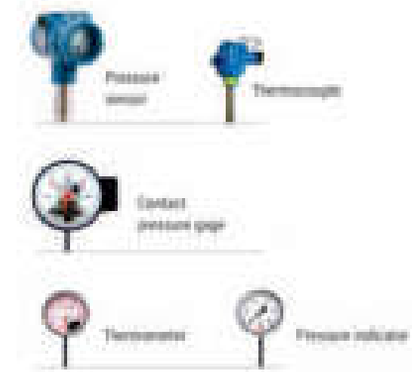

Figure 117
Measuring devices and sensors

- Full synchronization to two PCs (for operator's ones).
- Emergency reserve input 380/220/24 and uninterruptible power supply unit 220/24..

Figure 118
Installation diagram of control cabinets of POSV

Figure 119
Installation diagram of control cabinets of electric and pneumatic fittings

Technical specifications

The control of electric and pneumatic actuators is possible in the following modes:

- Manual mode from the control cabinet.
- Remote mode from the remote post.
- Automatic mode.
- Remote mode from SCADA-system.

Data transmission: The connection of the control cabinet with the upper level is performed through the RS485 interface according to Modbus RTU protocol.
Climatic version: M (moderate), MC (moderate cold), C (cold) according to GOST 15150-69.
Placement category: 1, 2, 3, 4 according to GOST 15150-69.
The functions and completeness of the control cabinets (CC) and control and measuring instruments are determined for a specific task based on the terms of reference (configuration data sheet). The controllers used when manufacturing the CC can be both of the Russian and foreign origin. This makes the manufacture and subsequent operation of the equipment independent from the import.

Quality warranty

1. The control cabinets are manufactured according to TR 27.12.31-007-15365247-2016 and comply with the requirements of CU TR 004/2011 “On safety of low-voltage equipment” and CU TR 020/2011 “Electromagnetic compatibility of technical means”.
2. The properly selected power fittings and control and measuring instruments ensure the necessary accuracy of regulation of the steam parameters according to RD 34.26.508 – Standard instructions on operation of PRDS (FRPRDS, PRDS, steam bypass devices).
3. The structure and software of the CCC (controller control cabinet) fully comply with the requirements of FRR “Regulations of industrial safety for hazardous facilities using equipment working under excess pressure”.

The specialists of BBP, LLC provide the following services for commissioning and start-up and the equipment:

- Control of proper installation
- Inspection of adjustment
- Putting of the stations (PRDS, FRPRDS, DS, PRS) into operation.

Upon the customer's demand, it is possible to develop a SCADA-system or to integrate the CCC into the existing automatic process control system.

Noise Dampers of Steam and Gas Discharge into the Atmosphere

Purpose

Reduction of the sound pressure level in the adjacent areas during the discharge of steam/gases into the atmosphere to the values required by the Customer and established in Regulation HR 2.2.4/2.1.8.562-96 and other regulatory documents.

Technical specifications

Discharged medium: water steam, carbon dioxide, nitrogen, air.
The steam parameters in the pipeline in front of the discharge valve are as follows:

- pressure is not more than 27 MPa,
- temperature is not higher than 570 °C.

Installation place: on the discharge end of the discharge pipeline.
Body form: cylindrical.
Applied steel grades: St3, steel 20, 09G2S, 08H13, 12H1MF, 08H18N10T.
Sound-Damping Materials:

- thermoacoustic power boards PTE-75 according to TR 5761-001-00126238-00;
- glass cloth EZ-200 according to GOST 19907-2015;
- mats MPB-50/ST1/EZ-200 according to TR 5769-002-08621635-98.

According to the ratio of acoustic efficiency/weight (considering parameters of the discharged medium to the valve, medium flow and pipeline diameter), the noise dampers are divided into the following types:

- 80-100 dBA (the larger weight and dimensions, with a dissipative unit), Fig. 120;
- 95-120 dBA (the lesser weight and dimensions, without a dissipative unit), Fig. 121.

Operating principle

- The reduction of the sound pressure level when discharging steam into the atmosphere happens thanks to the effective braking and extension of the steam flow, speed reduction in the outlet section and flow separation into the smallest jets, as well as through acoustical absorption with sound absorbing boards.
- When the safety or discharge device is activated, the steam goes through the discharge pipeline below to the inlet fitting. Afterwards, it goes sequentially through the expansion chambers and throttle grids located on one axis. The steam is extended and reduces its speed. The throttle grids ensure alignment of the speed field and reduction of the maximum speed of the effluent flow to the required level.
- Then, the steam goes into the dissipative part of the noise damper, where the sound is reduced in the sound absorbing boards. The steam passes into the atmosphere between the cover and body, and the sound wave is additionally absorbed in the cover.
- The removal of moisture, produced as a result of the medium condensation passing through the noise damper and settling down on its inner surfaces, is carried out to the drain pipe, located in the bottom of the lower part of the given device.

Package of works for the noise damper manufacture:

- design according to the terms of reference of the customer;
- aerodynamic, acoustic and strength calculations;
- selection of materials;
- documentation development;
- noise damper production;
- delivery to the customer's warehouse.

The structure of the silencer is as follows

- The lower part contains a cylindrical body which is heat and sound insulated inside, cylindrical throttle grids dividing the inner body cavity into expansion chambers, a medium supply pipe and a drain branch pipe. The throttle grids below the perimeter are welded to the body bottom and closed with covers from above.
- The middle part represents a body continuation, inside of which sound-absorbing cassettes are installed. The cassettes consist of basalt boards ПТЭ, limited with glass cloth and perforated sheets from stainless steel 08X13. The sound insulation of the body is performed in the analogous manner. The cassettes produce a sound-absorbing volume in form of ring channels through which the discharged medium is moving.
- The upper part represents a cover intended for prevention of atmospheric precipitations penetration into the silencer. It also contains a thermal insulation board board closed with glass cloth and perforated sheets.
- The steam supply is carried out through connection of an exhaust pipeline to the branch pipe of the silencer. The connection may be made as welded connection, flanged connection or with gland sealing for compensation of the thermal expansion of the discharge pipeline (at the customer's option).

The structure of the noise damper is calculated and designed individually on the basis of the terms of reference (configuration data sheet).

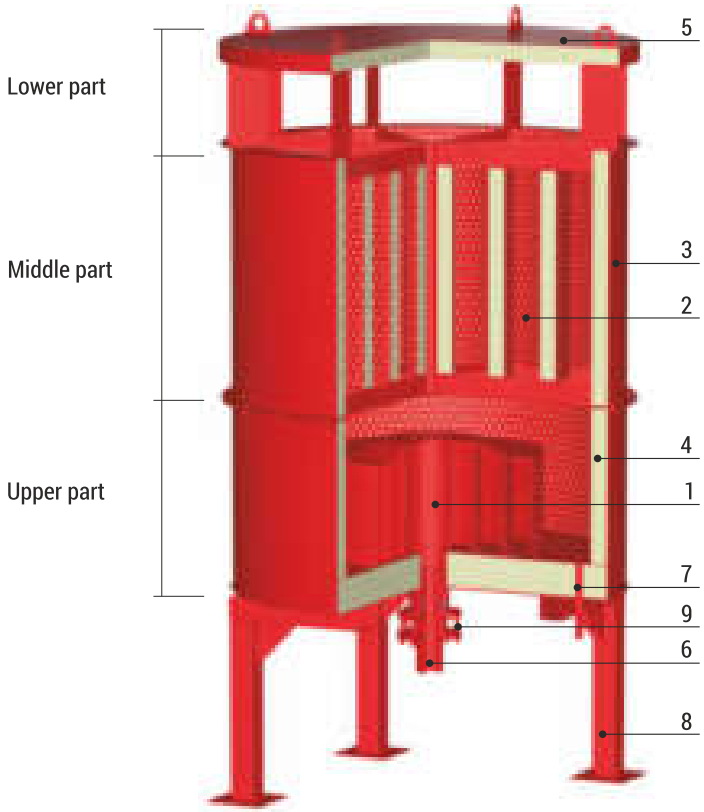

Figure 120
Noise Damper of Steam/Gas Discharge of improved efficiency

There are the following structural elements of the silencer:

1 Throttle unit
2 Sound-absorbing cassettes
3 Body
4 Heat and sound insulation
5 Cover
6 Medium supply pipe
7 Drainage
8 Supporting frame
9 Sealing gland

Figure 121
Noise Damper of Steam/Gas Discharge of a light-weight structure

Barnaul Boiler Plant BKZ

CATALOGUE 2020

Barnaul Boiler Plant, LLC
656023, Russia, Altai Territory, Barnaul
P.O. box 276, h. 6э , Kosmonavtov Pr.
Reception: +7 (3852) 33-66-67
Sales Department: +7 (3852) 22-32-67
Procurement Department: +7 (3852) 37-96-08
Shipping Department: +7 (3852) 33-80-58
E-mail: bkz@bkzn.ru
www.bkzn.ru

The official representative in the territory of the Republic of Belarus
is Trade House "Barnaul Boiler Plant", LLC
220024, Republic of Belarus, Minsk
Stebenev St., h. 16/2, office 3
Phone/fax: +375 (17) 365-70-75
E-mail: office@bkz.by
www.bkz.by