18с-6-2Э-06

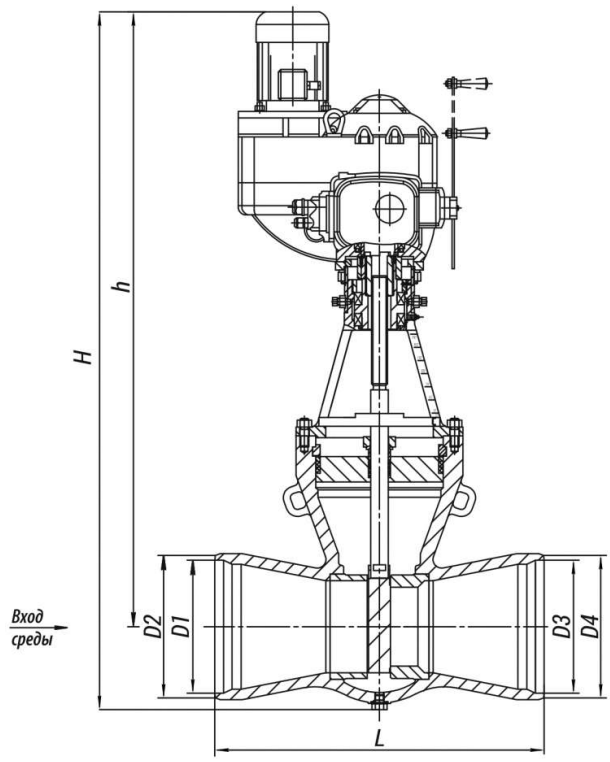

Production according to TR 2913-001-15365247-2004

Pipeline connection: welded connection.
Climatic version: У, УХЛ, ХЛ, Т
according to GOST 15150-69.
Placement category: 1, 2, 3 according to GOST 15150-69.
The valve control is carried out with the help of the following actuators:

- a single-turn electric actuator (МЭО) through the lever;
- multi-turn built-in electric actuators with a current position sensor of single-turn electric flanged actuator (ПЭМ) type (ABS ZEIM Automation), SAR (AUMA);
- actuators of other manufacturers with standard connection units.

Specifications

DN, mm	PN, MPa	Tmax of the Medium, °C	Body Material, Steel	Working Medium	Operating Stroke, mm	Max. Kv, m³/h	F, cm²	TQ, N•m, maximum torque at spindle plug	Inlet/Outlet Diameter, mm	Type of shell	Full Stroke Rotation Number	L, mm	Designation of the electric drive	N, kW	t хода, с.	H, mm	h, mm	D1, mm	D2, mm	D3, mm	D4, mm	Weight without Electric Actuator, kg	Full Weight, kg	Torque, N*m
150	10	450	25Л	Вода-пар	130	100	25	250	150/150	Проходной	21,5	450	ПЭМ-Б2У	0,55	52	1663	1515	142	160	142	160	152,7	192,7	0

Legend

DN - Nominal Diameter
PN - Nominal Pressure
P - Pressure
Tmax - Maximum Design Temperature
Mкр - Spindle Torque
t - Response time
μ - Fluid Flow Coefficient
h - Valve Stroke
Kv - Throughput Capability
F - Seat Area
ζ - Resistance Coefficient

The special control valves of type 18c are used as controlled throttle units of FRPRDS and PRDS, as well as for the control

of the working medium pressure in steam and water pipelines.

Structural designs:

- globe control valves;
- control valves.

The valves are designed and manufactured considering specific requirements of the customer to order.

Page link:

https://en.bkzn.ru/catalog/armatura-reguliruyushhaya/klapany-speczialnye-18s/18s-6-2e-06/